City of Afton

**CITY COUNCIL AGENDA**
AFTON CITY COUNCIL CHAMBERS
3033 St. Croix Trail South
**TUESDAY, August 20, 2019**
**7:00 P.M.**

## 1. CALL TO ORDER

## 2. PLEDGE OF ALLEGIANCE

## 3. ROLL CALL

_____Mayor Palmquist
_____Council Member Nelson
_____Council Member Ross
_____Council Member Wroblewski
_____ Council Member Perkins

## 4. APPROVAL OF AGENDA

**A.** Approval of the Agenda for the Regular City Council Meeting of August 20, 2019 -

## 5. APPROVAL OF MINUTES

**A.** Minutes of the July 16, 2019 Regular City Council Meeting-
**B.** Minutes of the August 1, 2019 Special City Council Meeting-

## 6. PUBLIC INPUT

Citizens may share their comments or concerns on any issue that is a responsibility or function of the Afton City Council, whether or not the issue is on the Agenda. Persons who wish to address the Council must fill out a Comment Card before the meeting begins and give it to the City Administrator or Council Chair. The Council Chair will request you to come to the podium, state your full name and address and present your comments. You are encouraged to limit your presentation to no more than 3 minutes. The Council Chair reserves the right to limit an individual's presentation if it becomes redundant, repetitive, overly argumentative, or if it is not relevant to an issue that is part of the City of Afton's responsibilities. The Council Chair may also limit the number of individual presentations to accommodate the scheduled agenda items.

## 7. REPORTS/PRESENTATIONS

**A.** Sheriff's Monthly Report –
**B.** Tom Niedzwiecki, Budget Report -
**C.** Lower St. Croix Fire District Report –

## 8. CONSENT AGENDA

All matters listed on the Consent Agenda are considered to be routine by City Council and will be enacted in one motion. If a member wishes to discuss an item, that item will be removed from the Consent Agenda and considered separately. (Roll Call for Consent Agenda approval if Resolutions included):

**A.** Just and Correct Claims
**B.** 4M Fund Transfers – JULY – **Resolution 2019-21**

## 9. CITY COUNCIL BUSINESS

**A. Planning Commission Report** – (PC Chair Report & Draft PC Minutes)

1. Kathy and David Boisjoli Application for an Ordinance Amendment Regarding a Private Riding Stable with Equine-Assisted Mental Health Therapy and an Application for a Conditional Use Permit for Equine-Assisted Mental Health Therapy at a Private Riding Stable at 15489 45th Street
   - **Ordinance 04-2019**
   - **Resolution 2019-32**
2. PLCD Ordinance Review - Update

**B. Engineering Report** – (Engineer Staff Report & Council Update)

1. River Road Sanitary Sewer Project
2. Bridge 82505 Guardrail Replacement
3. 2020 Road Improvement Project
4. Bridge L8173 (Putnam Boulevard over Valley Creek)

**C. Administration** –

1. 2018 Audit Report
2. City Docks Rehabilitation
3. Levee Erosion Repair and Erosion Control Options
4. Signs and Trail for Steamboat Park
5. Laserfiche Workflows Implementation and Credit Card Payment Capability
6. City Council Expense Reimbursement Policy
7. Police Service Coverage

**D. Committee Reports -**

1. Public Works
2. Personnel
3. Parks
4. Heritage Preservation Commission / Design Review
5. Natural Resources and Groundwater

## 10. COUNCIL, CONSULTANT AND STAFF REPORTS, ANNOUNCEMENTS AND UPDATES

**A.** Ward 1 Council Member Perkins
**B.** Ward 2 Council Member Wroblewski
**C.** Ward 3 Council Member Ross
**D.** Ward 4 Council Member Nelson
**E.** Mayor Palmquist
**F.** City Attorney Knaak
**G.** City Administrator Moorse

## 11. ADJOURN

**A quorum of the City Council or Other Commissions may be present to receive information at, but not limited to, any of the following meetings: Planning Commission; the Public Works Committee; Parks Committee; Design Review and Historic Preservation Commission; Lower St. Croix Cable Commission; LSCWMO; MSCWMO; I-94 Corridor Coalition and the 5-City Mayor's Alliance.**

**PROCEEDINGS OF THE AFTON CITY COUNCIL**
**CITY OF AFTON**
**WASHINGTON COUNTY, MINNESOTA**

**DRAFT City Council Regular Meeting Minutes**
**July 16, 2019**
**Afton City Hall**
**3033 St. Croix Trail**
**Afton, MN 55001**
**7:00 P.M.**

1. **THE MEETING WAS CALLED TO ORDER** at 7:00 P.M. by Mayor Bill Palmquist

2. **THE PLEDGE OF ALLEGIANCE** – was recited.

3. **ROLL CALL:** Mayor Palmquist, Council Members Wroblewski, Ross, Nelson, Perkins. **A Quorum was Present.**

   **ALSO PRESENT:** City Engineer Susan Polka, City Administrator Ron Moorse, City Attorney Fritz Knaak, Planning Commission Chair Kris Kopitzke

4. **APPROVAL OF AGENDA –**
   Add items: 9c9 "Update on abandoned house" 9c10 "Exchange email acct" 9c11 "Belwin turtle research", 9c12 "Cross walk safety & county signage".

   **Motion/Second Ross/Wroblewski To approve the agenda for the July 16, 2019 Regular City Council meeting with changes noted. Passed 5-0.**

5. **APPROVAL OF MINUTES**
   **A.** Minutes of June 18, 2019 Regular City Council meeting
   **Motion/Second Ross/Wroblewski To approve the minutes of the June 18, 2019 Regular City Council meeting. Passed 5-0.**

   B. Minutes of June 12 Council Work session
   **Motion/Second Wroblewski/Ross to approve the minutes of the June 12, 2019 Council work session. Passed 5-0.**

   C. Minutes of June 12 Special Council meeting
   **Motion/Second Ross/Wroblewski to approve minutes of the June 12 Special Council meeting. Passed 5-0.**

6. **PUBLIC INPUT –**
   Perry Jaggers 50th St S; Stated he is the representative for the AG Zone. He is upset about how government is running. The Council is liable for what is being said. Wants to be recorded as he speaks. He was in the military and demands what is said is on record. City government is flawed from 3 sessions ago and people are upset. There will be changes at the next election. Everyone is angry.

7. **REPORTS/PRESENTATIONS –**
   **A.** Sheriff's Monthly Report
   No report

   **B.** Tom Niedzwiecki, Budget Report
   No report

**C.** Lower St. Croix Fire District Report
Kevin Johnson presented the audit for the fire district.

**8. CONSENT AGENDA**
**A.** Just and Correct Claims
**B.** 4M Fund Transfer June – Resolution 2019-28
**Motion/Second Ross/Wroblewski to approve Resolution 2019-28 4M fund transfers for June. All aye, passed 5-0.**

**9. CITY COUNCIL BUISINESS**
**A. Planning Commission Report** – (PC report & Draft PC minutes)
1. Kerry & Judy White Application for Minor Subdivision at 1132 Indian Tr – Resolution 2019-29
PC Chair Kopitzke explained that the Planning Commission's concern was the irregularly shaped lot created with the subdivision. They recommended adding condition 10 to address the shape.
Council member Wroblewski asked if it is in ordinance – the requirement of an irregularly shaped lot. (Ord addresses flag lots near a road and perpendicular lot lines to road. Comp plan discusses irregularly shaped lots.)
Council member Nelson asked if it is a policy or goal in the comp plan? (Policy #10)
Mayor Palmquist stated that this doesn't seem to be a flag lot. Council member Nelson agreed.
**Motion/Second Wroblewski/Palmquist to approve Resolution 2019-29 with conditions 1-9 but deleting condition 10.**
**Findings**
1. The subject property is located in the Rural Residential zone, as are the properties to the north, east and south. The property to the west is zoned Agricultural.
2. The Rural Residential zone allows residential use with five–acre minimum lot size.
3. The subdivision meets subdivision requirements

**Conditions**
1. Easements as required by the City Engineer shall be granted
2. All drainage and utility easements shall be subject to the review and approval of the City Engineer.
3. All grading, drainage and erosion control issues shall be subject to review and approval by the City Engineer, and by the Valley Branch Watershed District if they meet permit thresholds.
4. Scenic easements shall be placed on all slopes greater than 18%
5. The applicant shall execute a scenic easement agreement and shall record the scenic easement concurrent with the subdivision
6. A public road right-of-way easement shall be dedicated over the area within 30 feet of the centerline of Indian Trail.
7. Park dedication requirements shall be satisfied prior to recording of the subdivision, in accordance with Section 12-1270 of the Subdivision Ordinance
8. A permit for individual septic system to serve a new home on the additional parcel shall be obtained from the Washington County Public Health Department at the time of application for building permit for the home, and all requirements of the septic permit shall be met.
9. The driveway to serve Parcel A shall comply with Section 12-84 of the Zoning Ordinance and be subject to review and approval by the City Engineer.

**All aye, Passed 5-0.**

2. Rebecca Enos Variance Application at 15234 Afton Hills Ct
PC Chair Kopitzke stated that the commission recommended approval with condition of screening and that the garage be placed within 25' of house.

Nancy Bodey, neighbor; stated that the applicant requests the 25' distance condition be removed as it was mis-reading of the code. Additional screening will be added, trees would have to be removed if it is closer to the house.

Council member Wroblewski stated that screening should provide year-round coverage.

**Motion/Second Wroblewski/Ross To approve Resolution 2019-30 approving the Rebecca Enos variance application at 15234 Afton Hills Court, including findings, and conditions below, without the condition of being within 25 feet of the house.**

**Findings**

1. **The subject property is located in the Rural Residential zone, as are the surrounding properties.**
2. **The property is a substandard parcel, due to the lot size of 2.4 acres vs. the required minimum lot size of 5 acres.**
3. **The parcel is a corner lot with frontage on both Afton Hills Court and Afton Hills Drive.**
4. **There is not sufficient space to build to the north or west of the house. A location to the east of the house would take out many trees and would require the construction of an additional driveway running across the front yard of the property.**

**Conditions**

1. **The garage shall be located and constructed according to the surveys and plans submitted with the variance application, subject to revisions as required or approved by the City.**
2. **Vegetation removal shall be minimized.**

**All Aye, Passed 5-0.**

3. Kathy & David Boisjoli Application for Ordinance Amendment and CUP at 15489 45th St
   a. Ordinance 04-2019
   b. Resolution 2019-31

Chair Kopitzke provided a summary of the application. The Planning Commission would like time to work on language for the ordinance amendment.

Council member Ross would agree with the PC regarding commercial use in RR. Typically not approved.

Applicant has a private stable that allows therapy, which is more in line with what they do.

Council member Wroblewski stated there is boarding of horses that are not owned by homeowners.

Council member Nelson asked if this is a non-profit? (No, therapist that uses horses for anxiety treatment)

Council member Perkins stated this is a home based business that uses horses, not a commercial stable.

Mayor Palmquist stated the other therapist horses are boarded there, language needs to stipulate that other horses are owned by therapists and used for therapy in the CUP.

Kopitzke asked how narrowly should this be worded? Could be broader uses.

Mayor Palmquist recommended to include therapy but not too specific. PC can bring back language to consider next month.

Administrator Moorse recommended the council deny the CUP and allow the fee to go to a revised CUP specific to new ordinance language.

**Motion/Second Palmquist/Wroblewski To deny Resolution 2019-31 and authorize staff to reapply fees. All aye, Passed 5-0**

4. PLCD ordinance review – update

Chair Kopitzke provided an update on the review.

**B. Engineering Report** – (Engineer Staff Report & Council Update)

1. Afton Creek Preserve Construction Update

City Engineer Sue Polka provided an update on the construction with an overview of the past 2 weeks.

Mayor Palmquist asked about trucks and water control issues. Largely are the rucks going the right way? (yes) What are we doing about if they aren't?

Administrator Moorse replied that the authorized haul route is Neal to 60th because those roads can handle the weight.
Mayor Palmquist asked if we can put signs up?
Council member Wroblewski stated there are no signs up; she has followed trucks on the wrong route. An email was sent that was very disrespectful from Mr Smith. There should be no truck traffic. Have to control their subcontractors.
Mayor Palmquist agreed the email could have been better. Would like to have problems fixed. Signs? What is watersheds role?
Administrator Moorse stated the Valley Branch Watershed operates differently than South Washington. South Washington does not have an inspector, our engineer has to monitor erosion control.
Mayor Palmquist asked if our engineer is being sent out more?
Administrator Moorse replied that there are inspectors on sight.
Mayor Palmquist stated this project has started off badly, need to be diligent but not overly burdensome.
Council member Ross asked if Nick goes to the because of problems or does he go for engineering?
Administrator Moorse replied that issues are forwarded to Nick, he calls contractor.
Council member Ross told the contractor to get control of trucks, solve the problem and other issues will go away. Why aren't they following rules? (They are subcontractors, signs are up, maps have been given out for the haul route)
Council member Perkins stated that email should be going to contractor. This is not the neighbors fault, not Councils fault.
Council member Wroblewski stated the only sign posted is by Denmark Township, no signs on Trading Post
**Motion/Second Ross/Nelson To give permission to put signs up 40th, 50th, Trading Post, and Odell reading "no construction traffic".**
Attorney Knaak stated it is the contractor's responsibility. If it is a chronic problem, they are violating terms of agreement and are providing the city an opportunity to review entire agreement. Sole responsibility is on developer. City is within it's rights to call a hearing and address the issue. You have right to be there but contractually obligated to follow agreement. Be sure this stops, recourse is allowed under agreement.
**Ross amended the motion: "contractor to post "no construction trucks allowed" at 40th, 50th, 50th & Odell, Trading Post; signs need to be up by Friday this week. (Nelson second)**
Council member Perkins asked why we should have to be specifying this?
Council member Ross replied that this is the second time we've had to do this with giving a deadline, would like it on record.
Council member Perkins stated that the burden is being placed on city, shouldn't be on us. Rules have already been spelled out. What are steps we take now to document?
Council member Ross stated that we are on record that we are having to do this due to violations.
Carlson (Developer) stated that we have no intention of driving trucks where they aren't supposed to be driven. He will be sure signs are put up. He is being accused of many things that are not true. There are maps in every truck, not being done intentionally. Will demand Peterson (sub contractor) resolve issues.
**Ross withdraw motion**
**Motion/Second Ross/Nelson To Give Mr. Carlson and his contractor permission to put up signs in city right-of-way at soonest convenience. Passed 5-0.**
Council member Wroblewski asked about the noxious weeds on the parcel.
Carlson there is a schedule for restoration. Prairie Restorations will be spraying and disking in July and August with planting next year.
Council member Wroblewski asked about runoff issues shown in photos.
City Engineer Polka stated that the site was inspected today and all is in compliance; will do a bit more research on erosion.
Council member Wroblewski has informed residents to email the council with problems and complaints. Construction is being allowed 9-5 on Saturdays.

Council member Ross stated the city doesn't have staff to manage noise or speed problems; call the Sherriff's non-emergency number for documentation of violations.
Carlson will volunteer to take calls on his personal cell to address problems the best he can. Problem with complaints is that they go to city engineer and he's paying for it. Would like to stop the bleeding and get it done.
Attorney Knaak stated that if not in compliance and not according with terms of agreement; ultimately the city could re-do the entire agreement.

**C. Administration –**

1. Snowplowing contract extension with Tri County

**Motion/Second Nelson/Ross to approve a 5 year contract extension for snowplowing with Tri County Services. Passed 5-0.**

2. City dock rehabilitation plan and cost update

Ken has a cost estimate of $24,000 for materials, 2 different estimates from local installers. Major repairs are to restructure the main support and the fingers entire length of dock.
Council member Wroblewski asked about the dock fee? (5/non-resident, 3/resident; overnight $20. 10 slips total)
Mayor Palmquist stated we are in a long term contract to operate dock for another 15 years. We have a maintenance fund to repair and replace.
Council member Wroblewski asked is it worth having? We are providing for small amount of people that have boats.

3. Additional Patrols for Speed Enforcement

Additional patrols were out for Memorial Day weekend. Extra patrols for Labor Day weekend would cost $1000.
Council member Wroblewski asked if we know how many tickets were issued? Do we get fees?
Attorney Knaak replied that the city gets a portion of the fines.
**Motion/Second Ross/Palmquist To approve extra patrols for Labor Day weekend.**
Discussion
Council member Ross feels there was improvement in speed and noise. Would like to see similar on Afton Blvd during weekdays, perhaps split patrol sites.
Council member Wroblewski would be interested in ticket numbers and also selective traffic enforcement by Neal & 40th.
Council member Perkins asked about doing a split shift for weekend and for weekday?
Council member Ross agreed there is need for weekday rush-hour coverage.
**Mayor Palmquist friendly amendment to have extra patrol over Labor Day weekend and split additional hours over weekdays. (accepted)**
**Motion Vote: Passed 5-0.**

4. Randall Morgan request to Vacate Scenic Easements at Stagecoach Trail and Sand Hill Road

**Motion/Second Ross/Wroblewski to deny request from Randall Morgan to vacate Scenic Easements on the parcel at Stagecoach Trail and Sand Hill Road with PID# 10.028.20.23.0008 to allow a driveway and house to be built in the area of the scenic easements.**
Discussion
Randy Morgan, 553 Neal Ave; Stated there were issues with recording the easements. Would like to re-write the easement so that it is buildable lot.
Mayor Palmquist stated this was subdivided in '09 and easements were put on. Driveway location is off Stagecoach.
Morgan stated he had default approval of driveway off of Sand Hill.
Council member Wroblewski stated the County is saying the driveway has to be revoked then added on Stagecoach.

Morgan stated the easement is written incorrectly, the house is in worst location on lot.
Attorney Knaak stated the only way to vacate an easement is through a judge. Option to re-subdivide, but would take judicial order to modify at this point.
Attorney Knaak stated we would have to re-do the process or start a judicial process to modify what's on record. Can't finesse, there is no statute that allows the city to vacate an easement that is on record. City cannot modify.
**Motion Vote: Passed 5-0.**

5 . Reimbursement of Council Member Ross for expenses related to attendance at the League of MN Cities Award Dinner
**Motion/Second Palmquist/Ross to approve reimbursement of expenses and authorize mileage as per policy.**
Discussion
Council member Wroblewski asked if we paid mileage for HPC member to attend conference? (Annual conference, yes we've paid mileage in past. Did not pay for time).
Council member Wroblewski noted it is perhaps time to review pay increase for council.
**Motion Vote: Passed 4-0-1 (Ross abstain)**

11. (taken out of order). Belwin Blanding's Turtle study
Val Stoehr NRGC member reported about the Blanding's turtle study being done at Belwin. The city's wastewater treatment site is great habitat – researcher would like access to site to look for turtles , if found would like access 24hr since they nest at night. Would mark site and put predator guard around it, would put tracking device on turtle. May – June, possible extension to Aug.-Sept as that's when they hatch.
Mayor Palmquist stated that the study area is outside of fence.
Council member Ross noted that the fenced-in area has motion sensing cameras, as long as he's outside that area it is fine.
**Motion/Second Palmquist/Nelson to authorize Jim Roo to conduct Blanding's Turtle study at the wastewater treatment site outside of the fenced treatment area during timeframes outlined.**
Nelson add "add your own risk"?
Attorney Knaak stated you could request a waiver
**Motion Amendment: Palmquist amend motion to have staff draw up agreement outlining dates etc. (Nelson accepted) Passed 5-0.**

6. Afton Parade Committee request regarding fee for parking during 4th of July parade
Council member Ross stated that costs associated with the parade have gone up substantially. The agreement keeps the city contribution fixed, need creative ways to generate revenue. Volunteers are stationed at these parking lots. The county dictates much of what needs to be done in terms of officers and the electronic sign.
**Motion/Second Palmquist/Nelson to approve Afton parade committee to charge a donation fee for parking at Steamboat, Carver and museum and other locations for July 4th parade. Passed 5-0.**

7. Laserfiche workflow implementation plan
Meeting on Monday

8. Replacement of City Hall bulletin board kiosk
Council member Ross has offered to replace
**Motion/Second Palmquist /Nelson To approve Council Member Ross replace the city Hall bulletin board/kiosk at a cost not to exceed $600. Passed 5-0.**

9. Update on abandoned house

Administrator Moorse has initiated a formal criminal complaint regarding the house. Hearing on July 31. Also there is an illegally parked SUV on street by museum off 31st, and snowmobile trailer.

10. Update on Microsoft Exchange
Council member Ross reported that in 2020 Exchange will no longer be supported. He is investigating other options.

12. Crosswalk issue
Mayor Palmquist would like to put a "no parking" sign to keep one spot open adjacent to the crosswalk at Selma's – pedestrians can't be seen.
Council member Ross stated that the businesses may not like losing a parking spot.
**Motion/Second Palmquist/Perkins to authorize Washington County to put a "no parking" sign in space adjacent to crosswalk at Selma's. Passed 5-0.**

**D. Committee Reports**

1. Public Works – Regarding the list of 2020 roads, in august WSB will do construction drawings, after approval they will do a drawing set for bid in December. January open bids. Work will include engineering costs, road costs, guardrails & culvert. Persistent problem of culvert under 30th by Neal which will be replaced also. Levee maintenance due to erosion. Long term solution is rip-rap for $80,000. Bridge work over valley creek not included.
**Motion/Second Ross/Palmquist To prepare bid package for bridge repair over Valley Creek. Passed 5-0.**
2. Personnel – no report
3. Parks – no report
4. Heritage Preservation Commission / Design Review – no report
5. Natural Resources and Groundwater – will have an article for newsletter

## 10. COUNCIL, CONSULTANT, AND STAFF REPORTS, ANNOUNCEMENTS, AND UPDATES

A. Ward 1 Council Member Perkins – looked into a noise ordinance concern
B. Ward 2 Council Member Wroblewski – Attended the River Valley Riders open house. Looked into a 60th & Manning dust issue.
C. Ward 3 Council Member Ross – no report
D. Ward 4 Council Member Nelson – no report
E. Mayor Palmquist – no report
F. City Attorney Knaak – no report
G. City Administrator Moorse – no report

## 11. ADJOURN

**Motion/Second Palmquist/Ross to adjourn. Passed 5-0.**
Meeting adjourned at 9:45 pm.

Respectfully submitted by:

_____
Julie Yoho, City Clerk

Approved by Council August 20, 2019 as (check one): Presented: _____ Amended: _____

Mayor Bill Palmquist_____ Date_____

**PROCEEDINGS OF THE AFTON CITY COUNCIL**
**CITY OF AFTON**
**WASHINGTON COUNTY, MINNESOTA**

**DRAFT City Council Special Meeting Minutes**
**August 1, 2019**
**Afton City Hall**
**3033 St. Croix Trail**
**Afton, MN 55001**
**5:00 P.M.**

---

1. **THE MEETING WAS CALLED TO ORDER** at 5:00 P.M. by Mayor Palmquist.

2. **ROLL CALL:** Council Members Ross, Wroblewski and Perkins and Mayor Palmquist. **Quorum Present.**
   Members Absent: Nelson.
   **ALSO PRESENT:** City Administrator Ron Moorse

3. **APPROVAL OF AGENDA**
   **Motion/Second: Ross/Wroblewski. To approve the agenda as written. Motion carried 4-0-0.**

4. **Appointment of a Temporary Two-Member Subcommittee of the Council to Address Construction Issues Related to the Afton Creek Preserve Subdivision.**

   Moorse indicated that Council member Ross had suggested the appointment of a temporary two-member subcommittee of the Council to address construction issues related to the Afton Creek Preserve Subdivision.

   Ross indicated the subcommittee's responsibilities would be to enforce the requirements of the Developer's Agreement, to communicate with the developer regarding violations, and to determine action to take regarding violations.

   The Council discussed the need to be able to stop violations, including construction traffic using roads different from the approved haul route.

**Motion/Second: Ross/Palmquist. To authorize a subcommittee of the Council, made up of Council members Ross and Wroblewski, to spend up to $2,500 to enforce the requirements of the Developer's Agreement and conditions of approval and construction. All decisions of the subcommittee are to be shared with staff, cannot involve changes to the Developer's Agreement, and a consensus of the two subcommittee members is needed for any action of the subcommittee. Motion carried 4-0-0.**

**Further discussion by the Council included two items. First, that the subcommittee would meet with the City Attorney to discuss enforcement options. Second, the Council questioned when and how the road through the 5550 Odell parcel becomes a public street.**

5. **ADJOURN –**

**Motion/Second: Ross/Palmquist. To adjourn the meeting at 5:58 p.m. Motion carried 4-0-0.**

Respectfully submitted by:

_____
Ronald J. Moorse, City Administrator

**Approved by Council (on August 20, 2019) as (check one): Presented: _____ Amended: _____**

**Signed by Mayor Bill Palmquist_____ Date_____**

# Citations for: Afton

## 7/1/2019 To 7/31/2019

| Agcy | Date | Citation Number | Badge | Officer Name | Citation Type | Block | Street Name | Str Sfx | Cross Street Name | Cross St Sfx | City | Literal Description | Statute |
|---|---|---|---|---|---|---|---|---|---|---|---|---|---|
| WCSO | 7/6/2019 | 820019918701 | WC12957 | L. Rinzel | Citation | 0 | MANNING AVE S | | LAKE RD | | Afton | MOV-Speed-Exceed 55 mph | 169.14.2(a)(3) |
| WCSO | 7/24/2019 | 820026920503 | WC12957 | L. Rinzel | Citation | 0 | MANNING AVE S | | 50TH ST S | | Afton | MOV-Speed-Exceed 55 mph | 169.14.2(a)(3) |
| WCSO | 7/31/2019 | 820025921201 | WC170 | S. Wittl | Citation | 0 | MANNING AVE S | | 50TH ST S | | Afton | MOV-Speed-Exceed 55 mph | 169.14.2(a)(3) |

# Incident Summary Report

**From:7/1/2019 12:00:00 AM To:7/31/2019 11:59:59 PM**

**WASHINGTON COUNTY SHERIFFS OFFICE**

*AFTON*

| | | | |
|---|---|---|---|
| 7/1/2019 12:06:17 AM | WC19027427 | Unknown, AFTON | 911 ABANDONED/HANGUP/OPEN LINE |
| 7/1/2019 12:04:43 PM | WC19027490 | XXX Stagecoach Trl S, AFTON | ACCIDENT |
| 7/1/2019 2:04:46 PM | WC19027509 | XXX Stagecoach Trl S, AFTON | CITIZEN/PUBLIC ASSIST |
| 7/1/2019 6:01:40 PM | WC19027566 | Manning Ave S Nb Over I94, AFTON | WELFARE CHECK |
| 7/1/2019 7:11:03 PM | WC19027580 | 3XXX Manning Ave S, AFTON | WELFARE CHECK |
| 7/1/2019 8:21:03 PM | WC19027588 | 13XXX 50th St S, AFTON | CITIZEN/PUBLIC ASSIST |
| 7/1/2019 11:59:37 PM | WC19027613 | I94 Eb At Neal Ave S, AFTON | ASSIST OTHER AGENCY |
| 7/2/2019 1:42:21 AM | WC19027625 | I94 Eb Jeo Neal Ave N, AFTON | ASSIST OTHER AGENCY |
| 7/2/2019 5:38:44 AM | WC19027641 | Neal Ave S / 30th St S, AFTON | road hazard |
| 7/2/2019 12:03:54 PM | WC19027692 | 5XXX Saint Croix Trl S, AFTON | OFFICER INFORMATION |
| 7/2/2019 4:30:03 PM | WC19027740 | 15XXX 32nd St S, AFTON | CITIZEN/PUBLIC ASSIST |
| 7/2/2019 7:03:41 PM | WC19027760 | 5XXX Odell Ave S, AFTON | ALARM-BUSINESS/RES/FIRE/MEDICAL/ETC |
| 7/2/2019 8:48:47 PM | WC19027774 | 16XXX 32nd St S, AFTON | PROPERTY DAMAGE |
| 7/2/2019 9:09:55 PM | WC19027776 | SAINT CROIX RIVER-A, AFTON | WATER INCIDENT/VIOLATION |
| 7/2/2019 10:24:46 PM | WC19027789 | Unknown, AFTON | ANIMAL BITE |
| 7/3/2019 9:27:28 AM | WC19027857 | 1XXX Stagecoach Trl S, AFTON | TRESPASSING |
| 7/3/2019 3:33:39 PM | WC19027920 | I94 Wb Jeo Neal Ave N, AFTON | DRIVING COMPLAINT |
| 7/3/2019 7:17:08 PM | WC19027964 | I94 Eb At Manning Ave S, AFTON | DRIVING COMPLAINT |
| 7/3/2019 9:48:58 PM | WC19027996 | Norcrest Ave S / 50th St S, AFTON | FIREWORKS |
| 7/4/2019 8:16:40 AM | WC19028060 | Unknown, AFTON | CITIZEN/PUBLIC ASSIST |
| 7/4/2019 11:53:38 AM | WC19028084 | Saint Croix Trl S / 33rd St S, AFTON | 911 ABANDONED/HANGUP/OPEN LINE |
| 7/4/2019 1:11:26 PM | WC19028090 | 3XXX Saint Croix Trl S, AFTON | MEDICAL |
| 7/4/2019 1:25:00 PM | WC19028095 | 16XXX 31st St S, AFTON | MEDICAL |
| 7/4/2019 1:25:34 PM | WC19028101 | Saint Croix Trl S / 36th St S, AFTON | 911 ABANDONED/HANGUP/OPEN LINE |
| 7/4/2019 5:55:34 PM | WC19028153 | Saint Croix River-a, AFTON | WATER INCIDENT/VIOLATION |
| 7/5/2019 10:20:59 AM | WC19028321 | 3XXX Saint Croix Trl S, AFTON | ALARM-BUSINESS/RES/FIRE/MEDICAL/ETC |
| 7/5/2019 1:37:42 PM | WC19028349 | Afton Blvd S / Afton Boulevard Ct S, AFTON | ACCIDENT |
| 7/5/2019 3:09:17 PM | WC19028371 | 15XXX Afton Blvd S, AFTON | ANIMAL COMPLAINT |
| 7/5/2019 4:12:45 PM | WC19028384 | Scr Kc, AFTON | BOAT STOP |
| 7/6/2019 2:15:27 PM | WC19028517 | 13XXX 50th St S, AFTON | ACCIDENT |
| 7/6/2019 2:44:03 PM | WC19028520 | Unknown, AFTON | OTHER |
| 7/7/2019 12:23:25 PM | WC19028685 | 1XXX Quant Ave S, AFTON | DOMESTIC ASSAULT |
| 7/7/2019 4:42:31 PM | WC19028728 | XXX Fahlstrom Pl, AFTON | ALARM-BUSINESS/RES/FIRE/MEDICAL/ETC |
| 7/7/2019 9:52:03 PM | WC19028788 | Saint Croix Trl S / 45th St S, AFTON | ANIMAL COMPLAINT |
| 7/8/2019 7:30:01 AM | WC19028822 | Unknown, AFTON | ANIMAL COMPLAINT |
| 7/9/2019 2:46:00 AM | WC19029033 | 3XXX Saint Croix Trl S, AFTON | MEDICAL |
| 7/9/2019 8:46:34 AM | WC19029058 | Unknown, AFTON | OFFICER INFORMATION |
| 7/10/2019 12:06:37 PM | WC19029244 | 13XXX 50th St S, AFTON | FRAUD/SCAM |
| 7/10/2019 5:10:06 PM | WC19029303 | 15XXX 50th St S, AFTON | THEFT |

# Incident Summary Report

**From:7/1/2019 12:00:00 AM To:7/31/2019 11:59:59 PM**

| | | | |
|---|---|---|---|
| 7/10/2019 5:31:00 PM | WC19029296 | unknown, AFTON | CITIZEN/PUBLIC ASSIST |
| 7/11/2019 8:26:54 AM | WC19029401 | River Rd S / Saint Croix Trl S, AFTON | TRAFFIC COMPLAINT |
| 7/11/2019 9:56:26 AM | WC19029416 | 50th St S / Trading Post Trl S, AFTON | CITIZEN/PUBLIC ASSIST |
| 7/11/2019 9:16:07 PM | WC19029516 | SAINT CROIX RIVER-A, AFTON | WATER INCIDENT/VIOLATION |
| 7/11/2019 9:35:53 PM | WC19029520 | 50th St S / Pheasant Ct S, AFTON | INCIDENT |
| 7/12/2019 6:32:00 AM | WC19029556 | Trading Post Trl S / 55th St S, AFTON | ANIMAL COMPLAINT |
| 7/12/2019 7:33:36 AM | WC19029559 | I94 Wb Jeo Manning Ave N, AFTON | DRIVING COMPLAINT |
| 7/12/2019 9:55:35 AM | WC19029583 | Saint Croix Trl S / 50th St S, AFTON | ANIMAL COMPLAINT |
| 7/12/2019 10:13:36 AM | WC19029594 | 4XXX River Rd S, AFTON | ACCIDENT |
| 7/12/2019 10:59:13 AM | WC19029602 | 12XXX 2nd St S, AFTON | PARKING COMPLAINT |
| 7/12/2019 1:32:13 PM | WC19029622 | 5XXX Osgood Ave S, AFTON | ANIMAL COMPLAINT |
| 7/12/2019 8:28:45 PM | WC19029684 | 5XXX Odell Ave S, AFTON | ANIMAL COMPLAINT |
| 7/13/2019 7:26:04 AM | WC19029750 | 15XXX Afton Blvd S, AFTON | ALARM-BUSINESS/RES/FIRE/MEDICAL/ETC |
| 7/13/2019 7:36:16 AM | WC19029751 | 14XXX 55th St S, AFTON | ANIMAL COMPLAINT |
| 7/13/2019 12:00:45 PM | WC19029781 | 55th St S / Osgood Ave S, AFTON | ANIMAL COMPLAINT |
| 7/13/2019 1:28:28 PM | WC19029798 | 1XXX Quant Ave S, AFTON | FRAUD/SCAM |
| 7/13/2019 3:54:05 PM | WC19029819 | Saint Croix River-a, AFTON | WATER INCIDENT/VIOLATION |
| 7/13/2019 5:14:00 PM | WC19029840 | Unknown, AFTON | OFFICER INFORMATION |
| 7/13/2019 6:00:10 PM | WC19029854 | 16XXX 32nd St S, AFTON | FOUND PROPERTY/ITEM |
| 7/13/2019 8:05:55 PM | WC19029879 | SAINT CROIX RIVER-A, AFTON | WATER INCIDENT/VIOLATION |
| 7/13/2019 10:47:05 PM | WC19029906 | 5XXX Manning Ave S, AFTON | ALARM-BUSINESS/RES/FIRE/MEDICAL/ETC |
| 7/13/2019 11:03:35 PM | WC19029912 | 5XXX Osgood Ave S, AFTON | FIREWORKS |
| 7/14/2019 12:04:07 PM | WC19029975 | 3XXX Pennington Ave S, AFTON | MEDICAL |
| 7/14/2019 3:47:53 PM | WC19030003 | Saint Croix River-a, AFTON | WATER INCIDENT/VIOLATION |
| 7/15/2019 5:49:02 AM | WC19030090 | 2XXX Saint Croix Trl S, AFTON | WELFARE CHECK |
| 7/15/2019 11:31:36 AM | WC19030139 | 4XXX Pasture Ridge Rd S, AFTON | DOMESTIC-VERBAL ABUSE |
| 7/15/2019 11:50:50 AM | WC19030181 | Unknown, AFTON | SUSPICIOUS PERSON/ACTIVITY |
| 7/15/2019 12:04:23 PM | WC19030177 | 3XXX Saint Croix Trl S, AFTON | SUSPICIOUS PERSON/ACTIVITY |
| 7/15/2019 4:59:11 PM | WC19030210 | 2XXX Saint Croix Trl S, AFTON | ALARM-BUSINESS/RES/FIRE/MEDICAL/ETC |
| 7/15/2019 5:35:17 PM | WC19030214 | 4XXX Pasture Ridge Rd S, AFTON | DOMESTIC ASSAULT |
| 7/15/2019 7:16:25 PM | WC19030237 | Neal Ave S / 30th St S, AFTON | ACCIDENT |
| 7/15/2019 8:08:57 PM | WC19030251 | Unknown, AFTON | CITIZEN/PUBLIC ASSIST |
| 7/15/2019 8:11:30 PM | WC19030252 | 16XXX 15th St S, AFTON | WELFARE CHECK |
| 7/15/2019 8:59:37 PM | WC19030254 | 2XXX SAINT CROIX TRL S, AFTON | ACCIDENT |
| 7/16/2019 8:40:52 AM | WC19030320 | Unknown, AFTON | CITIZEN/PUBLIC ASSIST |
| 7/17/2019 9:25:39 AM | WC19030500 | 3XXX Neal Ave S, AFTON | ANIMAL COMPLAINT |
| 7/17/2019 11:09:32 AM | WC19030520 | 4XXX Pasture Ridge Rd S, AFTON | ASSIST OTHER AGENCY |
| 7/17/2019 10:08:17 PM | WC19030606 | 13XXX Hudson Rd S, AFTON | FRAUD/SCAM |
| 7/18/2019 1:26:02 AM | WC19030622 | Hudson Rd S / Neal Ave S, AFTON | TRAFFIC STOP |
| 7/18/2019 4:23:10 AM | WC19030636 | 12XXX 3rd St S, AFTON | HAZMAT |
| 7/18/2019 1:08:57 PM | WC19030702 | 3XXX PENNINGTON AVE S, AFTON | FRAUD/SCAM |
| 7/18/2019 8:58:38 PM | WC19030773 | 16XXX 31st St S, AFTON | EXTRA PATROL REQUEST |

# Incident Summary Report

**From:7/1/2019 12:00:00 AM To:7/31/2019 11:59:59 PM**

| | | | |
|---|---|---|---|
| 7/19/2019 3:46:32 PM | WC19030900 | 14XXX -14855 AFTON BOULEVARD CT S, AFTON | TRAFFIC COMPLAINT |
| 7/20/2019 11:33:53 AM | WC19031065 | 45th St S / Saint Croix Trl S, AFTON | TRAFFIC COMPLAINT |
| 7/20/2019 1:21:25 PM | WC19031076 | 30th St S / Neal Ave S, AFTON | TRAFFIC COMPLAINT |
| 7/20/2019 2:20:33 PM | WC19031082 | 1XXX MAJESTIC PINES TRL, AFTON | VEHICLE UNLOCK |
| 7/20/2019 4:23:50 PM | WC19031100 | 12XXX 15th St S, AFTON | ALARM-BUSINESS/RES/FIRE/MEDICAL/ETC |
| 7/20/2019 6:36:20 PM | WC19031116 | Saint Croix River-a, AFTON | WATER INCIDENT/VIOLATION |
| 7/20/2019 7:05:56 PM | WC19031124 | 15XXX Afton Blvd S, AFTON | CITIZEN/PUBLIC ASSIST |
| 7/21/2019 4:25:35 AM | WC19031203 | 12XXX 3rd St S, AFTON | MEDICAL |
| 7/21/2019 5:39:43 AM | WC19031205 | 3XXX Saint Croix Trl S, AFTON | ANIMAL COMPLAINT |
| 7/21/2019 6:13:58 PM | WC19031289 | Saint Croix River-a, AFTON | BOAT STOP |
| 7/21/2019 6:27:24 PM | WC19031291 | SAINT CROIX RIVER-A, AFTON | BOAT STOP |
| 7/21/2019 6:29:26 PM | WC19031292 | SAINT CROIX RIVER-A, AFTON | BOAT STOP |
| 7/21/2019 7:42:44 PM | WC19031306 | 50th St S / Trading Post Trl S, AFTON | TRAFFIC COMPLAINT |
| 7/22/2019 6:49:08 AM | WC19031365 | 50th St S / Trading Post Trl S, AFTON | TRAFFIC COMPLAINT |
| 7/22/2019 9:39:22 AM | WC19031380 | 1XXX Stagecoach Trl S, AFTON | INDECENT EXPOSURE |
| 7/22/2019 9:46:47 AM | WC19031387 | 4XXX River Rd S, AFTON | OFFICER INFORMATION |
| 7/22/2019 1:39:10 PM | WC19031418 | 42nd St S / Trading Post Trl S, AFTON | OFFICER INFORMATION |
| 7/22/2019 3:57:15 PM | WC19031433 | 1XXX OELVIG AVE S, AFTON | SUICIDE ATTEMPT/THREATS OF |
| 7/23/2019 2:39:15 PM | WC19031562 | 12XXX 4th St S, AFTON | CITIZEN/PUBLIC ASSIST |
| 7/23/2019 6:27:55 PM | WC19031610 | 16XXX 32ND ST S, AFTON | BOAT STOP |
| 7/24/2019 12:25:30 AM | WC19031650 | 12XXX Hudson Rd S, AFTON | ALARM-BUSINESS/RES/FIRE/MEDICAL/ETC |
| 7/24/2019 6:19:51 PM | WC19031756 | 13XXX 50th St S, AFTON | MEDICAL |
| 7/24/2019 6:49:19 PM | WC19031762 | 50XXX -5999 MANNING AVE S, AFTON | TRAFFIC STOP |
| 7/24/2019 8:32:07 PM | WC19031779 | Saint Croix River-a, AFTON | WATERCRAFT ASSIST/RESCUE |
| 7/24/2019 9:48:27 PM | WC19031791 | 12XXX Meadow Bluff Trl, AFTON | ALARM-BUSINESS/RES/FIRE/MEDICAL/ETC |
| 7/25/2019 4:55:51 PM | WC19031936 | Saint Croix Trl S / 30th St S, AFTON | ANIMAL COMPLAINT |
| 7/25/2019 8:49:00 PM | WC19031931 | 3XXX Norsted Ave S, AFTON | FRAUD/SCAM |
| 7/26/2019 1:24:44 PM | WC19032061 | 5XXX Odell Ave S, AFTON | TRAFFIC COMPLAINT |
| 7/26/2019 7:15:57 PM | WC19032126 | Stagecoach Trl S / Valley Creek Trl S, AFTON | TRAFFIC COMPLAINT |
| 7/26/2019 7:24:42 PM | WC19032121 | 3XXX Saint Croix Trl S, AFTON | WELFARE CHECK |
| 7/26/2019 9:18:08 PM | WC19032138 | 1XXX Manning Ave S, AFTON | ACCIDENT |
| 7/26/2019 10:06:02 PM | WC19032143 | 1XXX Manning Ave S, AFTON | CITIZEN/PUBLIC ASSIST |
| 7/27/2019 3:18:24 PM | WC19032234 | 12XXX 8th St S, AFTON | MEDICAL |
| 7/27/2019 3:28:02 PM | WC19032235 | SAINT CROIX RIVER-A, AFTON | WATER INCIDENT/VIOLATION |
| 7/27/2019 3:40:54 PM | WC19032236 | SAINT CROIX RIVER-A, AFTON | WATER INCIDENT/VIOLATION |
| 7/27/2019 4:59:11 PM | WC19032259 | Trading Post Trl S / 50th St S, AFTON | ANIMAL COMPLAINT |
| 7/27/2019 8:01:08 PM | WC19032291 | Saint Croix River Afton Channel-a, AFTON | WATER INCIDENT/VIOLATION |
| 7/27/2019 8:10:54 PM | WC19032293 | Saint Croix River Afton Channel-a, AFTON | WATER INCIDENT/VIOLATION |
| 7/28/2019 5:53:55 PM | WC19032417 | 12XXX 2nd St S, AFTON | NOISE COMPLAINT/DISTURBANCE |
| 7/29/2019 7:03:41 AM | WC19032461 | 5XXX Odell Ave S, AFTON | SUSPICIOUS PERSON/ACTIVITY |

## Incident Summary Report

**From:7/1/2019 12:00:00 AM To:7/31/2019 11:59:59 PM**

| | | | |
|---|---|---|---|
| 7/29/2019 8:57:46 AM | WC19032474 | 13XXX 15th St S, AFTON | CITIZEN/PUBLIC ASSIST |
| 7/29/2019 11:21:59 AM | WC19032494 | 15XXX Afton Blvd S, AFTON | SUSPICIOUS PERSON/ACTIVITY |
| 7/29/2019 11:52:37 AM | WC19032497 | Unknown, AFTON | SUSPICIOUS PERSON/ACTIVITY |
| 7/29/2019 11:54:11 AM | WC19032499 | I94 Eb At Manning Ave S, AFTON | TRAFFIC COMPLAINT |
| 7/29/2019 1:27:50 PM | WC19032512 | 14XXX 15th St S, AFTON | CIVIL MATTER/DISPUTE |
| 7/29/2019 2:04:19 PM | WC19032516 | 3XXX Norsted Ave S, AFTON | MEDICAL |
| 7/29/2019 2:38:18 PM | WC19032519 | Saint Croix River-a, AFTON | CITIZEN/PUBLIC ASSIST |
| 7/29/2019 6:34:05 PM | WC19032564 | 16XXX 15th St S, AFTON | CIVIL MATTER/DISPUTE |
| 7/30/2019 8:59:45 AM | WC19032637 | XXX Fahlstrom Pl, AFTON | ALARM-BUSINESS/RES/FIRE/MEDICAL/ETC |
| 7/30/2019 11:25:08 AM | WC19032658 | 15XXX Afton Hills Dr S, AFTON | OFFICER INFORMATION |
| 7/30/2019 12:48:28 PM | WC19032679 | Unknown, AFTON | CITIZEN/PUBLIC ASSIST |
| 7/30/2019 8:32:52 PM | WC19032732 | I94 Eb Jeo Neal Ave N, AFTON | DRIVING COMPLAINT |
| 7/31/2019 9:44:40 AM | WC19032786 | 15XXX Afton Hills Dr S, AFTON | INCIDENT |
| 7/31/2019 10:30:10 AM | WC19032790 | 1XXX Neal Ave S, AFTON | FRAUD/SCAM |
| 7/31/2019 11:00:35 AM | WC19032795 | 1XXX Neal Ave S, AFTON | CITIZEN/PUBLIC ASSIST |
| 7/31/2019 5:23:59 PM | WC19032863 | 1XXX Neal Ave S, AFTON | CITIZEN/PUBLIC ASSIST |
| 7/31/2019 7:35:24 PM | WC19032882 | Saint Croix River Afton Channel-a, AFTON | CITIZEN/PUBLIC ASSIST |

# City of Afton – Financial Reports
# July 2019

| Ref | Description | Pages |
|---|---|---|
| A. | Balance Sheet | A1 to A2 |
| B. | Statement of Changes in Fund Balance: Year to Date | B1 to B3 |
| C. | Statement of Revenue and Expenditures: General Fund Summary plus Detail for All Other Funds | C1 to C14 |
| D. | Detail Statement of Revenue and Expenditures: General Fund Only | D1 to D6 |
| E. | #550, 560 & 600 Summary of Special Activity & MN Investment Funds - YTD | E1 |
| F. | #550 Detail of General Special Activity Funds - YTD | F1 to F2 |
| G. | #560 Detail of Other Special Activity Funds - YTD | G1 |
| H. | #115 Building and Land Fund: YTD Detail | H1 |
| I. | #410 Sanitary Sewer Utility Oper Fund: LTD Summary & YTD Detail | I1 to I4 |
| J. | #120 Street Improvement Fund: YTD Detail | J1 |
| K. | #122 Bridge Replacement Fund: YTD Detail | K1 |
| L. | #200 Park Reserve Fund – YTD Detail | L1 |
| M. | #805 City Infra-Structure Imp Fund: LTD Summary & YTD 2018 Detail | M1 to M3 |
| N. | #806 PFA Loans & #807 Tmp Imp Bond Debt Serv Funds: LTD | N1 |
| O. | #725 2014A & #726 2017B Road Bond Debt Serv Funds: Five Year Summary | O1 |
| P. | #810 City Dock Fund: YTD Detail by Account | P1 |
| Q. | General Fund Streets, Rehab and Public Works: YTD Detail | Q1 to Q3 |
| R. | Customer Receipts & Other Deposits – Current Month | R1 to R4 |
| S. | Building Inspection Fees – YTD | S1 to S4 |

**Focus Areas for Discussion:**

1. **Cash Flow & 1st Half Property Tax Collections are Strong at 53.8% of Budget.**
2. **8/1/19 Bond Payments on 2014A & 2017B Road Bonds (all interest).**
3. **Property & Casualty Annual Insurance Premium**
4. **Expenses re. Assessment Appeals & Easements.**
5. **Wash Cty 2019 Assessing Fee**
6. **New John Deere Z950M ZTrak**
7. **Workers Comp Annual Insurance Premium**
8. **2018 Audit Fees**
9. **Sale of Flood Pump**
10. **Review City Council Contingency Reserve**
11. **Status of 410 Sanitary Sewer Operations Fund**
12. **2018 Activity in 200 Park Reserve Fund**
13. **8/20/19 PFA Loan Payments (Principal + Interest)**

Prepared by Thomas H. Niedzwiecki, Accountant

*City of Afton*
*Balance Sheet*
*July 31, 2019*

| Account # | Account Description | #100 General Fund | #550 Spec Act Fd - General | #100 + #550 Total General Fund | #115 Bldg & Land Fund | #410 Sanitary Sewer Oper Fund | #120 Street Imp Capital Fund | #122 Bridge Replacement Fund | #700 2017 Road Projects | #200 Park Reserve Fund | #250 Special Reserve Fund | #400 201 Project Fund |
|---|---|---|---|---|---|---|---|---|---|---|---|---|
| | **Assets** | | | | | | | | | | | |
| 100 | 4M Fund: General Fund | 581,072 | | 581,072 | | | | | | | | |
| 100.8 | Petty Cash | 310 | | 310 | | | | | | | | |
| 115 | 4M Fund: Bldg & Land Capital Fund | | | 0 | 13,748 | | | | | | | |
| 120 | 4M Fund: Street Imp Fd - Regular | | | 0 | | | 826,878 | | | | | |
| 120 | 4M Fund: Street Imp Fd - Downtown | | | 0 | | | | | | | | |
| 122 | 4M Fund: Bridge Replacement | | | 0 | | | | 64,551 | | | | |
| 700 | 4M Fund: 2017 Pavement Project | | | 0 | | | | | | | | |
| 200 | 4M Fund: Park Reserve Fund | | | 0 | | | | | | 258,214 | | |
| 250 | 4M Fund: Special Reserve Fund | | | 0 | | | | | | | 478,387 | |
| 400 | 4M Fund: 201 Project Fund | | | 0 | | | | | | | | 688 |
| 410 | 4M Fund: Sanitary Sewer Operations | | | 0 | | 49,300 | | | | | | |
| 500 | 4M Fund: Fire Station Debt Serv Fund | | | 0 | | | | | | | | |
| 550 | 4M Fd: Spec Activities Fd - General | | 409,565 | 409,565 | | | | | | | | |
| 560 | 4M Fd: Spec Activities Fd - Other | | | 0 | | | | | | | | |
| 600 | 4M Fund: MN Investment Fund | | | 0 | | | | | | | | |
| 700 | 4M Fund: Road Construction Fund | | | 0 | | | | | | | | |
| 725 | 4M Fund: 2014A Road Debt Serv Fd | | | 0 | | | | | | | | |
| 726 | 4M Fund: 2017B Road Debt Serv Fd | | | 0 | | | | | | | | |
| 805 | 4M Fund: City Infrastructure Fund | | | 0 | | | | | | | | |
| 806 | 4M Fund: PFA Loan Debt Serv Fd | | | 0 | | | | | | | | |
| 807 | 4M Fd: Dwntwn Tmp Imp Debt Serv Fd | | | 0 | | | | | | | | |
| 810 | 4M Fund: City Dock Fund | | | 0 | | | | | | | | |
| | Total Cash and Investments | 581,382 | 409,565 | 990,947 | 13,748 | 49,300 | 826,878 | 64,551 | 0 | 258,214 | 478,387 | 688 |
| 1170 | Taxes Receivable from County | | | 0 | | | | | | | | |
| 11xx | Fees & Other Receivables | (500) | | (500) | | | | | | | | |
| 1110 | Grants Receivable | | | 0 | | | | | | | | |
| 1115 | Special Assessments Receivable | | | 0 | | | | | | | | |
| Various | Year End Transfers | 0 | | 0 | | | | | | | | |
| 1414/2414 | Due (Owed): 250 Spec Res & 100 General | | | 0 | | | | | | | | |
| | Total Assets and Other Debits | 580,882 | 409,565 | 990,447 | 13,748 | 49,300 | 826,878 | 64,551 | 0 | 258,214 | 478,387 | 688 |
| | **Liabilities and Fund Balances** | | | | | | | | | | | |
| 2001 | Permit Escrow & Fees (net payable) | 95,186 | | 95,186 | | | | | | | | |
| 2005 | Accounts Payable | 179,210 | | 179,210 | | | | | | | | |
| 2121 | Bldg Surcharges Payable | 1,057 | | 1,057 | | | | | | | | |
| 2022 | Accrued Expenses | | | 0 | | | | | | | | |
| | Total Accounts and Other Payables | 275,453 | 0 | 275,453 | 0 | 0 | 0 | 0 | 0 | 0 | 0 | 0 |
| 2510 | Deferred Revenue - Grants | | | 0 | | | | | | | | |
| 2115 | Deferred Revenue - Special Assessments | | | 0 | | | | | | | | |
| Various | Fund Balance - Beginning of Year | 336,339.20 | 395,559 | 731,898 | 10,912 | 53,143 | 783,276 | 40,226 | 0 | 76,514 | 472,535 | 1,181 |
| Various | Current Year Net Increase (Decrease) | (30,910) | 14,006 | (16,904) | 2,836 | (3,843) | 43,602 | 24,325 | 0 | 181,700 | 5,852 | (493) |
| Various | Fund Balance - End of Period | 305,429.52 | 409,565 | 714,994 | 13,748 | 49,300 | 826,878 | 64,551 | 0 | 258,214 | 478,387 | 688 |
| | Total Liabilities and Fund Balances | 580,882 | 409,565 | 990,447 | 13,748 | 49,300 | 826,878 | 64,551 | 0 | 258,214 | 478,387 | 688 |

Prepared by Thomas H. Niedzwiecki, Accountant



A1

# *City of Afton*
# *Balance Sheet*
# *July 31, 2019*

| Account # | Account Description | #500 Fire Station: Debt Serv Fund | #560 Spec Act Fd - Other | #805 City Infrastructure Imp Fund | #806 PFA Loan Debt Serv Fund | #807 Dwntwn Tmp Imp Debt Serv Fund | #725 2014A Road Debt Serv Fd | #726 2017B Road Debt Serv Fd | #810 City Dock Fund | **Total All Governmental Funds** | #600 MN Investment Fd (Fiduciary) |
|---|---|---|---|---|---|---|---|---|---|---|---|
| | **Assets** | | | | | | | | | | |
| 100 | 4M Fund: General Fund | | | | | | | | | **581,072** | |
| 100.8 | Petty Cash | | | | | | | | | **310** | |
| 115 | 4M Fund: Bldg & Land Capital Fund | | | | | | | | | **13,748** | |
| 120 | 4M Fund: Street Imp Fd - Regular | | | | | | | | | **826,878** | |
| 120 | 4M Fund: Street Imp Fd - Downtown | | | | | | | | | **0** | |
| 122 | 4M Fund: Bridge Replacement | | | | | | | | | **64,551** | |
| 700 | 4M Fund: 2017 Pavement Project | | | | | | | | | **0** | |
| 200 | 4M Fund: Park Reserve Fund | | | | | | | | | **258,214** | |
| 250 | 4M Fund: Special Reserve Fund | | | | | | | | | **478,387** | |
| 400 | 4M Fund: 201 Project Fund | | | | | | | | | **688** | |
| 410 | 4M Fund: Sanitary Sewer Operations | | | | | | | | | **49,300** | |
| 500 | 4M Fund: Fire Station Debt Serv Fund | 27,360 | | | | | | | | **27,360** | |
| 550 | 4M Fd: Spec Activities Fd - General | | | | | | | | | **409,565** | |
| 560 | 4M Fd: Spec Activities Fd - Other | | 2,598 | | | | | | | **2,598** | |
| 600 | 4M Fund: MN Investment Fund | | | | | | | | | **0** | 108,538.16 |
| 700 | 4M Fund: Road Construction Fund | | | | | | | | | **0** | |
| 725 | 4M Fund: 2014A Road Debt Serv Fd | | | | | | 199,191 | | | **199,191** | |
| 726 | 4M Fund: 2017B Road Debt Serv Fd | | | | | | | 194,697 | | **194,697** | |
| 805 | 4M Fund: City Infrastructure Fund | | | 815,049 | | | | | | **815,049** | |
| 806 | 4M Fund: PFA Loan Debt Serv Fd | | | | 379,303 | | | | | **379,303** | |
| 807 | 4M Fd: Dwntwn Tmp Imp Debt Serv Fd | | | | | 42,640 | | | | **42,640** | |
| 810 | 4M Fund: City Dock Fund | | | | | | | | 70,271 | **70,271** | |
| | Total Cash and Investments | 27,360 | 2,598 | 815,049 | 379,303 | 42,640 | 199,191 | 194,697 | 70,271 | **4,413,822** | 108,538.16 |
| 1170 | Taxes Receivable from County | | | | | | | | | **0** | |
| 11xx | Fees & Other Receivables | | | | | | | | | **(500)** | |
| 1110 | Grants Receivable | | | | | | | | | **0** | |
| 1115 | Special Assessments Receivable | | | | | | | | | **0** | |
| Various | Year End Transfers | | | | | 0 | | | | **0** | 0.00 |
| 1414/2414 | Due (Owed): 250 Spec Res & 100 General | | | | | | | | | **0** | 0.00 |
| | Total Assets and Other Debits | 27,360 | 2,598 | 815,049 | 379,303 | 42,640 | 199,191 | 194,697 | 70,271 | 4,413,322 | 108,538.16 |
| | **Liabilities and Fund Balances** | | | | | | | | | | |
| 2001 | Permit Escrow & Fees (net payable) | | | | | | | | | **95,186** | |
| 2005 | Accounts Payable | | | | | | | | | **179,210** | |
| 2121 | Bldg Surcharges Payable | | | | | | | | | **1,057** | |
| 2022 | Accrued Expenses | | | | | | | | | **0** | |
| | Total Accounts and Other Payables | 0 | 0 | 0 | 0 | 0 | 0 | 0 | 0 | **275,453** | 0.00 |
| 2510 | Deferred Revenue - Grants | | | | | | | | | **0** | |
| 2115 | Deferred Revenue - Special Assessments | | | | | | | | | **0** | |
| Various | Fund Balance - Beginning of Year | 2,512 | 2 | (815,949) | 324,615 | 39,801 | 339,215 | 389,387 | 65,581 | **2,514,849** | 107,167.55 |
| Various | Current Year Net Increase (Decrease) | 24,848 | 2,596 | 1,630,998 | 54,688 | 2,839 | (140,024) | (194,691) | 4,689 | **1,623,020** | 1,370.61 |
| Various | Fund Balance - End of Period | 27,360 | 2,598 | 815,049 | 379,303 | 42,640 | 199,191 | 194,697 | 70,271 | **4,137,869** | 108,538.16 |
| | Total Liabilities and Fund Balances | 27,360 | 2,598 | 815,049 | 379,303 | 42,640 | 199,191 | 194,697 | 70,271 | 4,413,322 | 108,538.16 |

Prepared by Thomas H. Kreidlewicki, Accountant



A2

# *City of Afton - Statement of Changes in Fund Balances for Year to Date July 31, 2019*

| Description | #100 General Fund | #550 Spec Act Fd - General | #100 + #550 Total General Fund | #115 Bldg & Land Fund | #410 Sanitary Sewer Oper Fund | #120 Street Imp Capital Fund | #122 Bridge Replacement Fund |
|---|---|---|---|---|---|---|---|
| **Beginning Fund Balances** | **$336,339** | **395,559** | **731,898** | **10,912** | **53,143** | **783,276** | **40,226** |
| **Section I. Revenues** | | | | | | | |
| Property Taxes | 1,210,892 | 0 | 1,210,892 | 0 | 0 | 60,250 | 0 |
| Intergovernmental Revenues | (2,228) | 0 | (2,228) | 0 | 0 | 0 | 0 |
| Charges for Services | 540 | 0 | 540 | 0 | 25,050 | 0 | 0 |
| Fines and Forfeitures | 7,525 | 0 | 7,525 | 0 | 0 | 0 | 0 |
| Licenses, Fees and Permits | 131,833 | 0 | 131,833 | 0 | 0 | 0 | 0 |
| Special Assessments | 0 | 0 | 0 | 0 | 0 | 0 | 0 |
| Misc Revenue/Gaming Tax | 350 | 28 | 378 | 0 | 0 | 0 | 0 |
| DNR Flood Improvement Project | 0 | 0 | 0 | 0 | 0 | 0 | 0 |
| Other Grants/State Fire Aid | 7,876 | 0 | 7,876 | 0 | 0 | 0 | 0 |
| Interest Income | 6,026 | 4,934 | 10,960 | 136 | 622 | 7,835 | 500 |
| TIF District/MN Invest Fund Proceeds | 0 | 0 | 0 | 0 | 0 | 0 | 0 |
| Park Fees | 0 | 0 | 0 | 0 | 0 | 0 | 0 |
| | 0 | 0 | 0 | 0 | 0 | 0 | 0 |
| **Total Revenue** | **1,362,813** | **4,962** | **1,367,775** | **136** | **25,672** | **68,085** | **500** |
| **Other Financing Sources/Transfers** | **0** | **18,260** | **18,260** | **3,000** | **7,500** | **0** | **25,000** |
| **Section II. Expenditures** | | | | | | | |
| General and Administrative | | | | | | | |
| Wages and Benefits | 160,228 | 0 | 160,228 | 0 | 0 | 0 | 0 |
| Professional Services | 152,207 | 1,383 | 153,590 | 0 | 0 | 0 | 0 |
| Other Expenditures | 41,011 | 5,543 | 46,554 | 0 | 0 | 0 | 0 |
| Total General and Administrative | 353,446 | 6,926 | 360,372 | 0 | 0 | 0 | 0 |
| Public Safety/State Fire Aid | 292,407 | 0 | 292,407 | 0 | 0 | 0 | 0 |
| Public Health/Cons of Natural Resources | 381 | 0 | 381 | 0 | 37,014 | 0 | 0 |
| Streets | 149,279 | 0 | 149,279 | 0 | 0 | 0 | 0 |
| Downtown Improvement Projects | 0 | 0 | 0 | 0 | 0 | 0 | 0 |
| Other Street Imp/Road Paving Project | 3,059 | 2,290 | 5,348 | 0 | 0 | 24,483 | 1,175 |
| Buildings and Land/City Dock | 9,388 | 0 | 9,388 | 300 | 0 | 0 | 0 |
| TIF District/MN Inv Fund Loan Disb | 0 | 0 | 0 | 0 | 0 | 0 | 0 |
| Parks and Recreation | 17,251 | 0 | 17,251 | 0 | 0 | 0 | 0 |
| Debt Service - Int Exp, Issue, Admin | 0 | 0 | 0 | 0 | 0 | 0 | 0 |
| Debt Service - Principal Retirement | 0 | 0 | 0 | 0 | 0 | 0 | 0 |
| **Total Expenditures** | **825,210** | **9,216** | **834,426** | **300** | **37,014** | **24,483** | **1,175** |
| **Other Financing Uses/Transfers** | **568,512** | **0** | **568,512** | **0** | **0** | | **0** |
| **Revenues Over (Under) Expenditures** | **(30,910)** | **14,006** | **(16,904)** | **2,836** | **(3,843)** | **43,602** | **24,325** |
| **Ending Fund Balances** | **305,430** | **409,565** | **714,994** | **13,748** | **49,300** | **826,878** | **64,551** |

*Prepared by Thomas H. Niedzwiecki, Accountant*

*File: Afton Financial Reports July 2019.xlsm Sheet: Funds YTD*
*8/14/2019*

# *City of Afton - Statement of Changes in Fund Balances*
# *for Year to Date July 31, 2019*

| Description | #700 2017 Road Project Fd | #200 Park Reserve Fund | #250 Special Reserve Fund | #400 201 Project Fund | #500 Fire Station: Debt Service Fund | #560 Spec Act Fd - Other | #805 City Infrastructure Imp Fund |
|---|---|---|---|---|---|---|---|
| **Beginning Fund Balances** | **0.00** | **76,514** | **472,535** | **1,181** | **2,512** | **2** | **(815,949)** |
| **Section I. Revenues** | | | | | | | |
| Property Taxes | 0 | 0 | 0 | 0 | 0 | 0 | 0 |
| Intergovernmental Revenues | 0 | 0 | 0 | 0 | 0 | 11,561 | 0 |
| Charges for Services | 0 | 0 | 0 | 0 | 0 | 0 | 0 |
| Fines and Forfeitures | 0 | 0 | 0 | 0 | 0 | 0 | 0 |
| Licenses, Fees and Permits | 0 | 0 | 0 | 0 | 0 | 0 | 0 |
| Special Assessments | 0 | 0 | 0 | 0 | 0 | 0 | 0 |
| Misc Revenue/Gaming Tax | 0 | 0 | 0 | 0 | 0 | 0 | 0 |
| DNR Flood Improvement Project | 0 | 0 | 0 | 0 | 0 | 0 | 1,301,382 |
| Other Grants/State Fire Aid | 0 | 0 | 0 | 0 | 0 | 1,000 | 47,500 |
| Interest Income | 0 | 1,713 | 5,752 | 13 | 36 | 39 | 9,699 |
| TIF District/MN Invest Fund Proceeds | 0 | 0 | 0 | 0 | 0 | 0 | 0 |
| Park Fees | 0 | 190,000 | 0 | 0 | 0 | 0 | 0 |
| | 0 | 0 | 0 | 0 | 0 | 0 | 0 |
| **Total Revenue** | **0** | **191,713** | **5,752** | **13** | **36** | **12,600** | **1,358,581** |
| **Other Financing Sources/Transfers** | **0** | **0** | **100** | **0** | **24,812** | **0** | **275,023** |
| **Section II. Expenditures** | | | | | | | |
| General and Administrative | | | | | | | |
| Wages and Benefits | 0 | 0 | 0 | 0 | 0 | 0 | 0 |
| Professional Services | 0 | 0 | 0 | 0 | 0 | 0 | 0 |
| Other Expenditures | 0 | 0 | 0 | 0 | 0 | 9,004 | 0 |
| Total General and Administrative | 0 | 0 | 0 | 0 | 0 | 9,004 | 0 |
| Public Safety/State Fire Aid | 0 | 0 | 0 | 0 | 0 | 1,000 | 0 |
| Public Health/Cons of Natural Resources | 0 | 0 | 0 | 0 | 0 | 0 | 0 |
| Streets | 0 | 0 | 0 | 0 | 0 | 0 | 0 |
| Downtown Improvement Projects | 0 | 0 | 0 | 0 | 0 | 0 | 2,606 |
| Other Street Imp/Road Paving Project | 0 | 0 | 0 | 506 | 0 | 0 | 0 |
| Buildings and Land/City Dock | 0 | 0 | 0 | 0 | 0 | 0 | 0 |
| TIF District/MN Inv Fund Loan Disb | 0 | 0 | 0 | 0 | 0 | 0 | 0 |
| Parks and Recreation | 0 | 10,013 | 0 | 0 | 0 | 0 | 0 |
| Debt Service - Int Exp, Issue, Admin | 0 | 0 | 0 | 0 | 0 | 0 | 0 |
| Debt Service - Principal Retirement | 0 | 0 | 0 | 0 | 0 | 0 | 0 |
| **Total Expenditures** | **0** | **10,013** | **0** | **506** | **0** | **10,004** | **2,606** |
| **Other Financing Uses/Transfers** | **0** | **0** | **0** | **0** | **0** | **0** | **0** |
| **Revenues Over (Under) Expenditures** | **0** | **181,700** | **5,852** | **(493)** | **24,848** | **2,596** | **1,630,998** |
| **Ending Fund Balances** | **0** | **258,214** | **478,387** | **688** | **27,360** | **2,598** | **815,049** |

*Prepared by Thomas H. Niedzwiecki, Accountant*

*File: Afton Financial Reports July 2019.xlsm Sheet: Funds YTD*
*8/14/2019*

# *City of Afton - Statement of Changes in Fund Balances for Year to Date July 31, 2019*

| Description | #806 PFA Loan Debt Serv Fund | #807 Dwntwn Tmp Imp Debt Serv Fund | #725 2014A Road Debt Serv Fd | #726 2017B Road Debt Serv Fd | #810 City Dock Fund | **Total Governmental Funds** | #600 MN Investment Fd (Fiduciary) |
|---|---|---|---|---|---|---|---|
| **Beginning Fund Balances** | **324,615** | **39,801** | **339,215** | **389,387** | **65,581** | **2,514,849.12** | **107,168** |
| **Section I. Revenues** | | | | | | | |
| Property Taxes | 0 | 0 | 0 | 0 | 0 | **1,271,142** | 0 |
| Intergovernmental Revenues | 0 | 0 | 0 | 0 | 0 | **9,333** | 0 |
| Charges for Services | 0 | 0 | 0 | 0 | 3,850 | **29,440** | 0 |
| Fines and Forfeitures | 0 | 0 | 0 | 0 | 0 | **7,525** | 0 |
| Licenses, Fees and Permits | 0 | 0 | 0 | 0 | 0 | **131,833** | 0 |
| Special Assessments | 75,994 | 0 | 0 | 0 | 0 | **75,994** | 0 |
| Misc Revenue/Gaming Tax | 0 | 0 | 0 | 0 | 0 | **378** | 0 |
| DNR Flood Improvement Project | 0 | 0 | 0 | 0 | 0 | **1,301,382** | 0 |
| Other Grants/State Fire Aid | 0 | 0 | 0 | 0 | 0 | **56,376** | 0 |
| Interest Income | 3,841 | 494 | 1,601 | 884 | 839 | **44,965** | 1,371 |
| TIF District/MN Invest Fund Proceeds | 0 | 0 | 0 | 0 | 0 | **0** | 0 |
| Park Fees | 0 | 0 | 0 | 0 | 0 | **190,000** | 0 |
| | 0 | 0 | 0 | 0 | 0 | **0** | 0 |
| **Total Revenue** | **79,835** | **494** | **1,601** | **884** | **4,689** | **3,118,367** | **1,371** |
| **Other Financing Sources/Transfers** | **35,000** | **18,500** | **137,500** | **195,000** | **0** | **757,954** | **0** |
| **Section II. Expenditures** | | | | | | | |
| General and Administrative | | | | | | | |
| Wages and Benefits | 0 | 0 | 0 | 0 | 0 | **160,228** | 0 |
| Professional Services | 0 | 0 | 0 | 0 | 0 | **153,590** | 0 |
| Other Expenditures | 48,888 | 0 | 0 | 0 | 0 | **104,446** | 0 |
| Total General and Administrative | 48,888 | 0 | 0 | 0 | 0 | **418,264** | 0 |
| Public Safety/State Fire Aid | 0 | 0 | 0 | 0 | 0 | **293,407** | 0 |
| Public Health/Cons of Natural Resources | 0 | 0 | 0 | 0 | 0 | **37,395** | 0 |
| Streets | 0 | 0 | 0 | 0 | 0 | **149,279** | 0 |
| Downtown Improvement Projects | 0 | 0 | 0 | 0 | 0 | **2,606** | 0 |
| Other Street Imp/Road Paving Project | 0 | 0 | 0 | 0 | 0 | **31,511** | 0 |
| Buildings and Land/City Dock | 0 | 0 | 0 | 0 | 0 | **9,688** | 0 |
| TIF District/MN Inv Fund Loan Disb | 0 | 0 | 0 | 0 | 0 | **0** | 0 |
| Parks and Recreation | 0 | 0 | 0 | 0 | 0 | **27,264** | 0 |
| Debt Service - Int Exp, Issue, Admin | 11,259 | 16,155 | 84,125 | 70,575 | 0 | **182,114** | 0 |
| Debt Service - Principal Retirement | 0 | 0 | 195,000 | 320,000 | 0 | **515,000** | 0 |
| **Total Expenditures** | **60,147** | **16,155** | **279,125** | **390,575** | **0** | **1,666,529** | **0** |
| **Other Financing Uses/Transfers** | **0** | **0** | **0** | **0** | **0** | **568,512** | **0** |
| **Revenues Over (Under) Expenditures** | **54,688** | **2,839** | **(140,024)** | **(194,691)** | **4,689** | **1,623,020** | **1,371** |
| **Ending Fund Balances** | **379,303** | **42,640** | **199,191** | **194,697** | **70,271** | **4,137,869** | **108,538** |

*Prepared by Thomas H. Niedzwiecki, Accountant*

# City of Afton

## Statement of Revenue and Expenditures

## General Fund Summary plus Detail for All Other Funds

## Year to Date 7/31/19

| | Audited 2015 | Audited 2016 | Audited 2017 | Audited 2018 | Month(s) of Jul-19 | YTD Actual 7/31/19 | Annual Budget 2019 | Remaining Budget $ | YTD Act as % of Annual Budget |
|---|---|---|---|---|---|---|---|---|---|
| **#100 GENERAL FUND** | | | | | | | | | |
| **A: REVENUES** | | | | | | | | | |
| 1-PROPERTY TAXES | 1,676,572 | 1,861,437 | 2,020,162 | 2,127,129 | 0 | 1,210,892 | 2,251,291 | 1,040,399 | 53.8% |
| 2-INTERGOVERNMENTAL REVENUES | 8,998 | 9,076 | 9,854 | 9,327 | 317 | (2,228) | 2,734 | 4,962 | -81.5% |
| 3-CHARGES FOR SERVICES | 137 | 114 | 68 | 653 | 0 | 540 | 135 | (405) | 400.0% |
| 4-FINES AND FORFEITURES | 15,861 | 15,086 | 11,061 | 8,700 | 1,104 | 7,525 | 12,250 | 4,725 | 61.4% |
| 5-LICENSES, FEES, PERMITS | 190,172 | 281,870 | 279,359 | 175,415 | 45,257 | 131,833 | 153,400 | 21,567 | 85.9% |
| 7-MISCELLANEOUS REVENUE | 4,700 | 4,357 | 1,832 | 1,462 | 100 | 350 | 2,500 | 2,150 | 14.0% |
| 9-OTHER GRANTS | 8,410 | 8,410 | 8,710 | 8,410 | 6,676 | 7,876 | 8,290 | 415 | 95.0% |
| 10-INTEREST INCOME | 144 | 955 | 12,772 | 10,330 | 2,062 | 6,026 | 1,000 | (5,026) | 602.6% |
| 11-TIF DISTRICT | 0 | 0 | 0 | 0 | 0 | 0 | 0 | 0 | |
| **TOTAL REVENUES** | 1,904,993 | 2,181,305 | 2,343,817 | 2,341,426 | 55,515 | 1,362,813 | 2,431,600 | 1,068,787 | 56.0% |
| **B: EXPENDITURES** | | | | | | | | | |
| GENERAL AND ADMINISTRATIVE | | | | | | | | | |
| 1-WAGES & BENEFITS | 234,446 | 241,650 | 242,814 | 258,043 | 24,143 | 160,228 | 303,949 | 143,721 | 52.7% |
| 2-PROFESSIONAL SERVICES | 153,655 | 193,329 | 210,229 | 193,126 | 28,695 | 152,207 | 174,870 | 22,663 | 87.0% |
| 4-OTHER EXPENDITURES | 58,017 | 47,538 | 46,974 | 64,660 | 4,142 | 41,011 | 63,500 | 22,489 | 64.6% |
| **TOTAL GENERAL & ADMINISTRATIVE** | 446,119 | 482,517 | 500,017 | 515,829 | 56,980 | 353,446 | 542,319 | 188,873 | 65.2% |
| 5-PUBLIC SAFETY | 392,065 | 413,237 | 420,994 | 440,440 | 159,580 | 292,407 | 455,307 | 162,900 | 64.2% |
| 6-PUBLIC HEALTH | 1,087 | 1,784 | 1,270 | 641 | (125) | 381 | 1,500 | 1,119 | 25.4% |
| 7-STREETS | 218,410 | 162,992 | 241,863 | 248,711 | 25,968 | 149,279 | 265,000 | 115,721 | 56.3% |
| 9-OTHER PUBLIC WORKS | 1,914 | 1,910 | 1,864 | 3,217 | 1,123 | 3,059 | 5,050 | 1,991 | 60.6% |
| 10-BUILDINGS & LAND | 10,334 | 8,296 | 8,823 | 11,882 | 1,094 | 9,388 | 11,500 | 2,112 | 81.6% |
| 11-TIF DISTRICT | 0 | 0 | 0 | 0 | 0 | 0 | 0 | 0 | |
| 12-PARKS & RECREATION | 3,921 | 13,181 | 15,459 | 16,118 | 240 | 17,251 | 14,100 | (3,151) | 122.4% |
| **TOTAL EXPENDITURES** | 1,073,850 | 1,083,917 | 1,190,291 | 1,236,837 | 244,861 | 825,210 | 1,294,776 | 469,566 | 63.7% |
| **C: OTHER FINANCING SOURCES (USES)** | (805,133) | (1,096,493) | (1,148,933) | (1,101,055) | 0 | (568,512) | (1,136,824) | (568,312) | |
| **Net GENERAL FUND** | 26,010 | 895 | 4,594 | 3,534 | (189,346) | (30,910) | 0 | 30,910 | |



C1

# City of Afton

## Statement of Revenue and Expenditures

## General Fund Summary plus Detail for All Other Funds

## Year to Date 7/31/19

| | | Audited 2015 | Audited 2016 | Audited 2017 | Audited 2018 | Month(s) of Jul-19 | YTD Actual 7/31/19 | Annual Budget 2019 | Remaining Budget $ | YTD Act as % of Annual Budget |
|---|---|---|---|---|---|---|---|---|---|---|
| **#115 BUILDINGS AND LAND CAPITAL FUND** | | | | | | | | | | |
| A: Revenues | | | | | | | | | | |
| 4012 | Current Tax Levy - Bldg & Land | 6,000 | 6,000 | 6,000 | 6,000 | 0 | 3,000 | 6,000 | 3,000 | 50.0% |
| 4022 | Levy: Afton Septic System - City Bldgs | 15,000 | 15,000 | 0 | 0 | 0 | 0 | 0 | 0 | |
| 4216 | Rent of City Garage - Stagecoach | 0 | 0 | 0 | 600 | 0 | 0 | 0 | 0 | |
| 4600 | Grant/Insurance: City Hall | 0 | 750 | 0 | 0 | 0 | 0 | 0 | 0 | |
| 4831 | Trf in re. Park Structures | 0 | 0 | 0 | 0 | 0 | 0 | 0 | 0 | |
| 4832 | Wash Cty Sheriff Deputy Office Facility | 0 | 0 | 0 | 104,250 | 0 | 0 | 0 | 0 | |
| 6910 | Trf in fr General Fund (Non Budgeted) | 20,000 | 25,000 | 25,000 | 0 | 0 | 0 | 0 | 0 | |
| 4906 | Interest - Bldg & Land Fund | 17 | 158 | 696 | 561 | 19 | 136 | 0 | 0 | |
| | TOTAL REVENUE | 41,017 | 46,908 | 31,696 | 111,411 | 19 | 3,136 | 6,000 | 2,864 | 52.3% |
| B: Expenditures | | | | | | | | | | |
| 6003 | City Hall Improvements | 2,563 | 17,091 | 1,200 | 0 | 0 | 0 | 0 | 0 | |
| 6004 | Bldg Repair & Maintenance | 0 | 0 | 221 | 9,971 | 0 | 300 | 0 | 0 | |
| 6005 | City Garage Improvements | 0 | 0 | 0 | 0 | 0 | 0 | 0 | 0 | |
| 6007 | Wash Cty Sheriff Deputy Office Facility | 0 | 0 | 113,980 | 73,367 | 0 | 0 | 0 | 0 | |
| | TOTAL EXPENDITURES | 2,563 | 17,091 | 115,402 | 83,338 | 0 | 300 | 0 | (300) | |
| **Net BLDG & LAND CAPITAL FUND** | | 38,454 | 29,817 | (83,706) | 28,073 | 19 | 2,836 | 6,000 | 3,164 | 47.3% |

# City of Afton

## Statement of Revenue and Expenditures
## General Fund Summary plus Detail for All Other Funds
## Year to Date 7/31/19

| | | Audited 2015 | Audited 2016 | Audited 2017 | Audited 2018 | Month(s) of Jul-19 | YTD Actual 7/31/19 | Annual Budget 2019 | Remaining Budget $ | YTD Act as % of Annual Budget |
|---|---|---|---|---|---|---|---|---|---|---|
| **#120 STREET IMP CAPITAL FUND** | | | | | | | | | | |
| A: Revenues | | | | | | | | | | |
| 4013 | Current Tax Levy - Street Improvements | 200,000 | 200,000 | 275,000 | 70,000 | 0 | 60,250 | 120,500 | 60,250 | 50.0% |
| 4018 | Tax Levy - Downtown Projects | 0 | 0 | 100,000 | 0 | 0 | 0 | 0 | 0 | |
| 4907 | Interest - Street Imp Fund | 130 | 1,078 | 4,437 | 10,416 | 1,382 | 7,835 | 0 | (7,835) | |
| 4016 | MN Small City Assistance for Streets | 60,510 | 0 | 38,913 | 39,716 | 0 | 0 | 0 | 0 | |
| | TOTAL REVENUE | 260,640 | 201,078 | 418,350 | 120,132 | 1,382 | 68,085 | 120,500 | 52,415 | 56.5% |
| B: Expenditures | | | | | | | | | | |
| 7935 | Pennington Av Improvements | 0 | 0 | 0 | 0 | 0 | 0 | 0 | 0 | |
| 7937 | Bridge Repair & Replacement | 1,806 | 2,902 | 1,910 | 0 | 0 | 0 | 0 | 0 | |
| 7938 | Culvert Repair & Replacement | 0 | 0 | 0 | 22,723 | 0 | 249 | 0 | (249) | |
| 7936 | General Street Projects (Various) | 73 | 31,886 | 0 | 0 | 0 | 0 | 0 | 0 | |
| 7943 | 2017 Street Projects | 0 | 0 | 3,211,458 | 179,892 | 0 | 0 | 0 | 0 | |
| 7944 | 2018 Street Projects | 0 | 0 | 0 | 27,135 | 0 | 0 | 0 | 0 | |
| 7945 | 2019 Street Projects | 0 | 0 | 0 | 0 | 0 | 2,733 | 0 | (2,733) | |
| 7981 | Village Local Road Improvements | 250,099 | 86,205 | 29,240 | 0 | 0 | 0 | 0 | 0 | |
| 7982 | CR21 Improvement Project | 23,383 | 3,527 | 1,191 | (325) | 0 | 0 | 0 | 0 | |
| 7984 | River Road Sanitary Options | 0 | 0 | 0 | 3,419 | 8,943 | 21,501 | 0 | (21,501) | |
| | TOTAL EXPENDITURES | 275,360 | 124,520 | 3,243,799 | 232,844 | 8,943 | 24,483 | 0 | (24,483) | |
| C: Oth Fin Sources (Uses)/Transfers | | | | | | | | | | |
| 6910 | Oper Trf fr General Fd (Non Budgeted) | 43,500 | 230,000 | 100,000 | 0 | 0 | 0 | 0 | 0 | |
| 6926 | Trf to 805 City Infrastructure Fund | 0 | 0 | 0 | 120,745 | 0 | 0 | 0 | 0 | |
| 6920 | Trf fr 700 Road Const Fd | 0 | 0 | 3,211,458 | 0 | 0 | 0 | 0 | 0 | |
| 6848 | Oper Trf from Road Construction Fund | 0 | 0 | (805,497) | 284,513 | 0 | 0 | 0 | 0 | |
| | TOTAL OTH FIN SOURCES (USES) | 43,500 | 230,000 | 2,505,960 | 405,259 | 0 | 0 | 0 | 0 | |
| **Net 120 STREET IMP CAPITAL FUND** | | 28,780 | 306,558 | (319,488) | 292,546 | (7,561) | 43,602 | 120,500 | 76,898 | 36.2% |
| **#122 BRIDGE REPLACEMENT FUND** | | | | | | | | | | |
| A: Revenues | | | | | | | | | | |
| 4017 | Levy - Bridge Replacement | 0 | 0 | 0 | 49,671 | 0 | 25,000 | 50,000 | 25,000 | 50.0% |
| xxxx | Interest Income - 4M Fund | 0 | 0 | 0 | 2 | 74 | 500 | 0 | (500) | |
| | TOTAL REVENUE | 0 | 0 | 0 | 49,673 | 74 | 25,500 | 50,000 | 24,500 | 51.0% |
| B: Expenditures/Transfers | | | | | | | | | | |
| 7771 | Engineering - Bridge Replacement | 0 | 0 | 0 | 9,447 | 0 | 1,175 | 0 | (1,175) | |
| 7772 | Construction - Bridge Replacement | 0 | 0 | 0 | 0 | 0 | 0 | 0 | 0 | |
| | TOTAL EXPENDITURES | 0 | 0 | 0 | 9,447 | 0 | 1,175 | 0 | (1,175) | |
| **Net 122 BRIDGE REPLACEMENT FUND** | | 0 | 0 | 0 | 40,226 | 74 | 24,325 | 50,000 | 25,675 | 48.7% |

# City of Afton
## Statement of Revenue and Expenditures
## General Fund Summary plus Detail for All Other Funds
## Year to Date 7/31/19

| | | Audited 2015 | Audited 2016 | Audited 2017 | Audited 2018 | Month(s) of Jul-19 | YTD Actual 7/31/19 | Annual Budget 2019 | Remaining Budget $ | YTD Act as % of Annual Budget |
|---|---|---|---|---|---|---|---|---|---|---|
| **#200 PARK RESERVE FUND** | | | | | | | | | | |
| A: Revenues | | | | | | | | | | |
| 4425 | Park Dedication Fees | 54,743 | 56,360 | 10,000 | 30,000 | 10,000 | 190,000 | 0 | (190,000) | |
| 4426 | Afton Donation Program - Parks | 0 | 0 | 2,400 | 2,400 | 0 | 0 | 0 | 0 | |
| 4903 | Interest Income - 4M Fund | 26 | 229 | 878 | 1,160 | 469 | 1,713 | 0 | (1,713) | |
| | | 0 | 0 | 0 | 0 | 0 | 0 | 0 | 0 | |
| | TOTAL REVENUE | 54,769 | 56,589 | 13,278 | 33,560 | 10,469 | 191,713 | 0 | (191,713) | |
| B: Expenditures | | | | | | | | | | |
| 6115 | Park & Open Space Public Works | 0 | 0 | 2,474 | 12,418 | 10,013 | 10,013 | 0 | (10,013) | |
| 6116 | Town Square Park Restroom | 280 | 1,450 | 115,854 | 448 | 0 | 0 | 0 | 0 | |
| 6117 | Grant - Lucy Winton Bell Athletic Fields | 0 | 0 | 0 | 0 | 0 | 0 | 0 | 0 | |
| 6125 | Bike Trail Improvements | 0 | 0 | 0 | 0 | 0 | 0 | 0 | 0 | |
| | TOTAL EXPENDITURES | 280 | 1,450 | 118,328 | 12,866 | 10,013 | 10,013 | 0 | (10,013) | |
| C: Oth Fin Sources (Uses)/Transfers | | | | | | | | | | |
| | Transfer to City Infrastructure Imp Fund | 0 | 0 | 0 | 0 | 0 | 0 | 0 | 0 | |
| | TOTAL OTH FIN SOURCES (USES) | 0 | 0 | 0 | 0 | 0 | 0 | 0 | 0 | |
| **Net PARK RESERVE FUND** | | 54,489 | 55,139 | (105,050) | 20,694 | 456 | 181,700 | 0 | (181,700) | |
| **#250 SPECIAL RESERVE FUND** | | | | | | | | | | |
| A: Revenues | | | | | | | | | | |
| 6936 | Levy/Trf from Genl Fd - Special Reserve | 5,000 | 88,000 | 9,500 | 5,000 | 0 | 100 | 100 | 0 | 100.0% |
| 4912 | Interest - Spec Reserve 4M Fund | 102 | 955 | 2,862 | 7,249 | 703 | 5,752 | 0 | (5,752) | |
| | TOTAL REVENUE | 5,102 | 88,955 | 12,362 | 12,249 | 703 | 5,852 | 100 | (5,752) | 5852.2% |
| B: Expenditures | | | | | | | | | | |
| 6918 | Trf to General/Special Act Funds | 0 | 0 | 75,000 | 0 | 0 | 0 | 0 | 0 | |
| | TOTAL EXPENDITURES | 0 | 0 | 75,000 | 0 | 0 | 0 | 0 | 0 | |
| **Net SPECIAL RESERVE FUND** | | 5,102 | 88,955 | (62,638) | 12,249 | 703 | 5,852 | 100 | (5,752) | 5852.2% |

# City of Afton

## Statement of Revenue and Expenditures

## General Fund Summary plus Detail for All Other Funds

## Year to Date 7/31/19

| | | Audited 2015 | Audited 2016 | Audited 2017 | Audited 2018 | Month(s) of Jul-19 | YTD Actual 7/31/19 | Annual Budget 2019 | Remaining Budget $ | YTD Act as % of Annual Budget |
|---|---|---|---|---|---|---|---|---|---|---|
| **#400 201 PROJECT FUND** | | | | | | | | | | |
| A: Revenues | | | | | | | | | | |
| 4625 | 201 Project Revenue | 3,787 | 6,450 | 5,891 | 470 | 0 | 0 | 0 | 0 | |
| 4904 | Interest - 201 Project | 0 | 1 | 10 | 28 | 2 | 13 | 0 | (13) | |
| | TOTAL REVENUE | 3,787 | 6,451 | 5,901 | 498 | 2 | 13 | 0 | (13) | |
| B: Expenditures | | | | | | | | | | |
| 5915 | 201 Project maintenance | 9,160 | 5,718 | 2,884 | 1,068 | 81 | 506 | 0 | (506) | |
| 5918 | 201 Project Mgmt | 0 | 0 | 0 | 0 | 0 | 0 | 0 | 0 | |
| | TOTAL EXPENDITURES | 9,160 | 5,718 | 2,884 | 1,068 | 81 | 506 | 0 | (506) | |
| **Net 201 PROJECT FUND** | | (5,373) | 734 | 3,018 | (571) | (79) | (493) | 0 | 493 | |
| **#410 SANITARY SEWER UTILITY FD** | | | | | | | | | | |
| A: Revenues | | | | | | | | | | |
| 4022 | Levy - Sanitary Sewer Operations | 0 | 0 | 15,000 | 15,000 | 0 | 7,500 | 15,000 | 7,500 | 50.0% |
| 4023 | Fees - Sanitary Sewer Operations | 0 | 0 | 0 | 29,850 | 5,140 | 25,050 | 0 | (25,050) | |
| xxxx | Interest Income - 4M Fund | 0 | 0 | 0 | 13 | 73 | 622 | 0 | (622) | |
| xxxx | | 0 | 0 | 0 | 0 | 0 | 0 | 0 | 0 | |
| | TOTAL REVENUE | 0 | 0 | 15,000 | 44,863 | 5,213 | 33,172 | 15,000 | (18,172) | 221.1% |
| B: Expenditures | | | | | | | | | | |
| 6062 | Contract Services - Other | 0 | 0 | 745 | 782 | 0 | 572 | 0 | (572) | |
| 6065 | Oper & Mgmt Fees/Permits | 0 | 0 | 1,508 | 20,509 | 1,508 | 11,595 | 0 | (11,595) | |
| 6066 | Chemical & Lab Fees | 0 | 0 | 0 | 10,582 | 700 | 5,420 | 0 | (5,420) | |
| 6068 | Electricity - Lift Stations | 0 | 0 | 0 | 15,004 | 2,222 | 11,981 | 0 | (11,981) | |
| 6069 | Insurance | 0 | 0 | 0 | 0 | (909) | 5,291 | 0 | (5,291) | |
| 6083 | Sanitary Sewer Spec Assessments | 0 | 0 | 0 | 2,590 | 0 | 2,156 | 0 | (2,156) | |
| | TOTAL EXPENDITURES | 0 | 0 | 2,254 | 49,467 | 3,521 | 37,014 | 0 | (37,014) | |
| **Net 410 SANITARY SEWER UTILITY FD** | | 0 | 0 | 12,746 | (4,604) | 1,692 | (3,843) | 15,000 | 18,843 | -25.6% |

# City of Afton

## Statement of Revenue and Expenditures

## General Fund Summary plus Detail for All Other Funds

## Year to Date 7/31/19

| | | Audited 2015 | Audited 2016 | Audited 2017 | Audited 2018 | Month(s) of Jul-19 | YTD Actual 7/31/19 | Annual Budget 2019 | Remaining Budget $ | YTD Act as % of Annual Budget |
|---|---|---|---|---|---|---|---|---|---|---|
| **#500 FIRE STATION DEBT SERV FUND** | | | | | | | | | | |
| A: Revenues | | | | | | | | | | |
| 4050 | Fire Station Curr Tax Levy | 57,933 | 49,893 | 49,833 | 49,784 | 0 | 24,812 | 49,625 | 24,813 | 50.0% |
| 4904 | Interest - Fire Station 4M Fund | 1 | 30 | 91 | 236 | 9 | 36 | 0 | (36) | |
| | TOTAL REVENUE | 57,934 | 49,923 | 49,924 | 50,020 | 9 | 24,848 | 49,625 | 24,777 | 50.1% |
| B: Expenditures | | | | | | | | | | |
| 6850 | Fire Station Debt Service Expense | 57,933 | 49,898 | 49,833 | 49,784 | 0 | 0 | 49,625 | 49,625 | 0.0% |
| | | 0 | 0 | 0 | 0 | 0 | 0 | 0 | 0 | |
| | TOTAL EXPENDITURES | 57,933 | 49,898 | 49,833 | 49,784 | 0 | 0 | 49,625 | 49,625 | 0.0% |
| **Net FIRE STATION DEBT SERV FUND** | | 1 | 25 | 91 | 236 | 9 | 24,848 | 0 | (24,848) | |

# City of Afton

## Statement of Revenue and Expenditures
## General Fund Summary plus Detail for All Other Funds
## Year to Date 7/31/19

| | | Audited 2015 | Audited 2016 | Audited 2017 | Audited 2018 | Month(s) of Jul-19 | YTD Actual 7/31/19 | Annual Budget 2019 | Remaining Budget $ | YTD Act as % of Annual Budget |
|---|---|---|---|---|---|---|---|---|---|---|
| **#550 SPECIAL ACTIVITIES FD - GENERAL** | | | | | | | | | | |
| A. 4914 | Interest - Spec Activity Fd (Unallocated) | 59 | 464 | 1,706 | 6,272 | 707 | 4,934 | 0 | (4,934) | |
| B. Cable Comm/4th of July Reserve/CC Contingency/Comm Garden | | | | | | | | | | |
| 4816 | Community Garden | 88 | 0 | 0 | 0 | 0 | 0 | 0 | 0 | |
| 4817 | MN Historic Preservation Design Guidelines | 8,000 | (8,225) | 0 | 0 | 0 | 0 | 0 | 0 | |
| 4818 | City Share High Speed Internet | 0 | 0 | 124,850 | 0 | 0 | 0 | 0 | 0 | |
| 4819 | Afton Residents for Preservation & Conservation | 0 | 0 | 1,500 | 0 | 0 | 0 | 0 | 0 | |
| 6910 | Oper Trf fr Gen'l Fd/City Council Contingency | (1,200) | 0 | 0 | 4,000 | 0 | 0 | 0 | 0 | |
| 6366 | City Council Contingency Reserve | 0 | (5,006) | 5,461 | (13,377) | 1,000 | 5,924 | 0 | (5,924) | |
| Total B. Cable Comm/4th of July Reserve | | 6,888 | (13,231) | 131,811 | (9,377) | 1,000 | 5,924 | 0 | (5,924) | |
| C. Codification/Comp Plan/Moratoria | | | | | | | | | | |
| 6934 | Oper Trf fr Gen'l Fd - Codification + Oth Rev | 100 | 100 | 100 | 100 | 0 | 250 | 500 | 250 | 50.0% |
| 6935 | Oper Trf fr Gen'l Fund - Comprehensive Plan | 2,000 | 3,000 | 14,000 | 4,000 | 0 | 2,000 | 4,000 | 2,000 | |
| 6958 | Comm Growth Options (1000 Friends Grant) | 0 | 0 | 0 | 0 | 0 | 0 | 0 | 0 | |
| 6356 | Comprehensive Plan Expenses | (8,208) | 0 | 0 | (5,049) | 0 | (1,383) | 0 | 1,383 | |
| 6358 | Community Growth Options: Expense | 0 | 0 | 0 | 0 | 0 | 0 | 0 | 0 | |
| Total C. Codification of Ordinances | | (6,108) | 3,100 | 14,100 | (949) | 0 | 867 | 4,500 | 3,633 | 19.3% |
| D. Flood & Storm Water Control and Mitigation | | | | | | | | | | |
| 6931 | Oper Trf fr Gen'l Fund (Flood Control) | 5,500 | 3,500 | 5,500 | 5,500 | 0 | 2,750 | 5,500 | 2,750 | 50.0% |
| 6932 | Oper Trf fr Gen'l Fund (Storm Water Run-off) | 3,500 | 5,500 | 3,500 | 5,500 | 0 | 1,750 | 3,500 | 1,750 | 50.0% |
| 6942 | LSCV Water Mgmt Org Revenue | 0 | 0 | 0 | 0 | 0 | 0 | 0 | 0 | |
| 7833 | TAG re. Wastewater Community Assessment | 15,982 | 0 | 0 | 0 | 0 | 0 | 0 | 0 | |
| 7836 | Flood & Storm Water Exp - General | 6,440 | (200) | 0 | 0 | (166) | (2,290) | 0 | 2,290 | |
| 7842 | Engineering Exp re. Old Village Public Process | 0 | 0 | 0 | 0 | 0 | 0 | 0 | 0 | |
| 7843 | Snow & Ice Reserve | 15,000 | 0 | 15,000 | 0 | 0 | 0 | 0 | 0 | |
| Total D. Flood Control & Mitigation | | 46,423 | 8,800 | 24,000 | 11,000 | (166) | 2,210 | 9,000 | 6,790 | 24.6% |
| E. Charitable Gaming Fund | | | | | | | | | | |
| 4950 | 10% Charitable Gaming Tax | 0 | 84 | 411 | 250 | 28 | 28 | 0 | (28) | |
| 5450 | Charitable Gaming Expenditures | 0 | 0 | 0 | 0 | 0 | 0 | 0 | 0 | |
| Total E. Charitable Gaming Fund | | 0 | 84 | 411 | 250 | 28 | 28 | 0 | (28) | |
| G. TIF District No. 1 (Afton Market Square) | | | | | | | | | | |
| 4924 | TIF District #1 Taxes | 0 | 0 | 0 | 0 | 0 | 0 | 0 | 0 | |
| 5424 | TIF District #1 Distributions/Expenses | (849) | 0 | 0 | 0 | 0 | 0 | 0 | 0 | |
| Total G. TIF District No. 1 (Afton Market Square) | | (849) | 0 | 0 | 0 | 0 | 0 | 0 | 0 | |

# City of Afton

## Statement of Revenue and Expenditures

## General Fund Summary plus Detail for All Other Funds

## Year to Date 7/31/19

| | | Audited 2015 | Audited 2016 | Audited 2017 | Audited 2018 | Month(s) of Jul-19 | YTD Actual 7/31/19 | Annual Budget 2019 | Remaining Budget $ | YTD Act as % of Annual Budget |
|---|---|---|---|---|---|---|---|---|---|---|
| I. City Vehicles/Equipment | | | | | | | | | | |
| 6933 | Oper Trf fr Gen'l - City Vehicles | 2,500 | 2,500 | 2,500 | 2,500 | 0 | 5,160 | 2,500 | (2,660) | 206.4% |
| 5508 | City Equipment | 0 | 0 | (2,435) | (1,319) | 0 | 0 | 0 | 0 | |
| 5977 | John Deere X749 Tractor | 0 | 0 | 0 | 0 | 0 | 0 | 0 | 0 | |
| 5978 | John Deere Z950M Ztrak | 0 | 0 | 0 | 0 | 0 | (9,900) | 0 | 9,900 | |
| Total I. City Vehicles | | 2,500 | 2,500 | 65 | 1,181 | 0 | (4,740) | 2,500 | 7,240 | -189.6% |
| K. Audit/Legal Reserve | | | | | | | | | | |
| 4842 | Oper Trf fr Gen'l - Audit/Legal | 100 | 1,000 | 1,000 | 1,000 | 0 | 100 | 100 | 0 | 100.0% |
| 6342 | Legal Exp - Deductible/CoPays | 0 | 0 | 0 | (5,817) | 0 | 0 | 0 | 0 | |
| Total K. Audit/Legal Reserve | | 100 | 1,000 | 1,000 | (4,817) | 0 | 100 | 100 | 0 | 100.0% |
| L. MN Unemployment Claims | | | | | | | | | | |
| 4843 | Oper Trf fr Gen'l - MN Unemployment | 3,000 | 1,000 | 1,000 | 1,000 | 0 | 500 | 1,000 | 500 | 50.0% |
| 4844 | Oper Trf fr Gen'l - Severance & Oth PTO | 0 | 0 | 0 | 0 | 0 | 0 | 0 | 0 | |
| 6343 | MN Unemployment Claim Expense | 0 | 0 | 0 | 0 | 0 | 0 | 0 | 0 | |
| 6344 | Severance Pay | 0 | 0 | 0 | 0 | 0 | 0 | 0 | 0 | |
| 6345 | Vacation, Sick & Other PTO | 0 | 0 | 0 | 0 | 0 | 0 | 0 | 0 | |
| Total L. MN Unemployment Claims | | 3,000 | 1,000 | 1,000 | 1,000 | 0 | 500 | 1,000 | 500 | 50.0% |
| M. Parks Capital Repairs/Trail & Ped Bridge & Sidewalk | | | | | | | | | | |
| 4844 | Oper Trf fr Gen'l - Parks Capital Repairs/Trail & Ped Brid | 5,500 | 5,500 | 5,500 | 5,500 | 0 | 2,750 | 5,500 | 2,750 | 50.0% |
| 4846 | Oper Trf fr Gen'l - Sidewalk | 2,000 | 2,000 | 2,000 | 2,000 | 0 | 250 | 500 | 250 | 50.0% |
| 6348 | Parks Capital Repairs/Trail & Ped Bridge Expense | 0 | 0 | (5,000) | 0 | 0 | 0 | 0 | 0 | |
| Total M. Parks Capital Repairs/Trail & Ped Bridge & Sidewalk | | 7,500 | 7,500 | 2,500 | 7,500 | 0 | 3,000 | 6,000 | 3,000 | 50.0% |
| N. Election Expense Reserve | | | | | | | | | | |
| 4847 | Oper Trf fr Gen'l - Election Levy | 5,500 | 5,500 | 5,500 | 16,500 | 0 | 2,750 | 5,500 | 2,750 | 50.0% |
| 6347 | Election Expenses | (121) | (7,207) | (1,550) | (24,591) | (12) | (1,567) | 0 | 1,567 | |
| Total N. Election Expense Reserve | | 5,379 | (1,707) | 3,950 | (8,091) | (12) | 1,183 | 5,500 | 4,317 | 21.5% |
| **Net 550 SPECIAL ACTIVITIES FD - GENERAL** | | 64,892 | 9,510 | 180,544 | 3,970 | 1,557 | 14,006 | 28,600 | 14,594 | 49.0% |

# City of Afton

## Statement of Revenue and Expenditures

## General Fund Summary plus Detail for All Other Funds

## Year to Date 7/31/19

| | | Audited 2015 | Audited 2016 | Audited 2017 | Audited 2018 | Month(s) of Jul-19 | YTD Actual 7/31/19 | Annual Budget 2019 | Remaining Budget $ | YTD Act as % of Annual Budget |
|---|---|---|---|---|---|---|---|---|---|---|
| **#560 SPEC ACTIVITIES FUND - OTHER** | | | | | | | | | | |
| A: Revenues | | | | | | | | | | |
| 4940 | State Fire Aid Received | 47,348 | 49,011 | 43,475 | 50,414 | 0 | 1,000 | 45,000 | 44,000 | 2.2% |
| 4815 | Cable Distributions Received | 9,115 | 6,253 | 10,881 | 12,391 | 0 | 11,561 | 0 | (11,561) | |
| xxxx | Interest Income - 4M Fund | 0 | 0 | 0 | 2 | 17 | 39 | 0 | (39) | |
| xxxx | | 0 | 0 | 0 | 0 | 0 | 0 | 0 | 0 | |
| | TOTAL REVENUE | 56,463 | 55,264 | 54,356 | 62,807 | 17 | 12,600 | 45,000 | 32,400 | 28.0% |
| B: Expenditures | | | | | | | | | | |
| 5440 | State Fire Aid Distributed | (47,348) | (49,011) | 43,475 | 50,414 | 0 | 1,000 | 45,000 | 44,000 | 2.2% |
| 5561 | Communications Expenses | (2,605) | (17,594) | 12,346 | 24,475 | 6,890 | 9,004 | 0 | (9,004) | |
| xxxx | | 0 | 0 | 0 | 0 | 0 | 0 | 0 | 0 | |
| | TOTAL EXPENDITURES | (49,952) | (66,605) | 55,821 | 74,888 | 6,890 | 10,004 | 45,000 | 34,996 | 22.2% |
| **Net 560 SPEC ACTIVITIES FUND - OTHER** | | 106,415 | 121,869 | (1,465) | (12,082) | (6,873) | 2,596 | 0 | (2,596) | |
| **#600 MN INVESTMENT FUND** | | | | | | | | | | |
| A: Revenues | | | | | | | | | | |
| 4886 | Chandler Exhibits Loan Repayment | 0 | 0 | 0 | 0 | 0 | 0 | 0 | 0 | |
| 4904 | Interest - MN Invest 4M Fund | 48 | 226 | 743 | 1,790 | 197 | 1,371 | 0 | (1,371) | |
| | TOTAL REVENUE | 48 | 226 | 743 | 1,790 | 197 | 1,371 | 0 | (1,371) | |
| B: Expenditures | | | | | | | | | | |
| 8986 | Chandler Exhibits Repay MN Invest Fd | 0 | 0 | 0 | 0 | 0 | 0 | 0 | 0 | |
| | TOTAL EXPENDITURES | 0 | 0 | 0 | 0 | 0 | 0 | 0 | 0 | |
| **Net MN INVESTMENT FUND** | | 48 | 226 | 743 | 1,790 | 197 | 1,371 | 0 | (1,371) | |

# City of Afton

## Statement of Revenue and Expenditures

## General Fund Summary plus Detail for All Other Funds

## Year to Date 7/31/19

| | | Audited 2015 | Audited 2016 | Audited 2017 | Audited 2018 | Month(s) of Jul-19 | YTD Actual 7/31/19 | Annual Budget 2019 | Remaining Budget $ | YTD Act as % of Annual Budget |
|---|---|---|---|---|---|---|---|---|---|---|
| **#700 2017 ROAD PAVING CONSTRUCTION FD** | | | | | | | | | | |
| A: Revenues | | | | | | | | | | |
| 4716 | 2017B Road Bond Proceeds | 0 | 0 | 3,500,000 | 0 | 0 | 0 | 0 | 0 | |
| xxxx | Interest Income - 4M Fund | 0 | 0 | 0 | 0 | 0 | 0 | 0 | 0 | |
| xxxx | | 0 | 0 | 0 | 0 | 0 | 0 | 0 | 0 | |
| | TOTAL REVENUE | 0 | 0 | 3,500,000 | 0 | 0 | 0 | 0 | 0 | |
| B: Expenditures/Transfers | | | | | | | | | | |
| 7741 | 2017B Road Bond Issue Exp | 0 | 0 | 4,029 | 0 | 0 | 0 | 0 | 0 | |
| 6948 | Trf to Street Imp Fund for Construction Costs | 0 | 0 | 3,211,458 | 284,513 | 0 | 0 | 0 | 0 | |
| xxxx | | 0 | 0 | 0 | 0 | 0 | 0 | 0 | 0 | |
| | TOTAL EXPENDITURES | 0 | 0 | 3,215,487 | 284,513 | 0 | 0 | 0 | 0 | |
| **Net 700 2017 ROAD PAVING CONSTRUCTION FD** | | 0 | 0 | 284,513 | (284,513) | 0 | 0 | 0 | 0 | |
| **#725 2014A ROAD DEBT SERVICE FUND** | | | | | | | | | | |
| A: Revenues | | | | | | | | | | |
| 4725 | Road Paving Debt Levy Proceeds | 310,000 | 260,000 | 260,000 | 170,000 | 0 | 137,500 | 275,000 | 137,500 | 50.0% |
| 4716 | 2017B Road Bond Proceeds | 0 | 0 | 0 | 0 | 0 | 0 | 0 | 0 | |
| 4916 | Interest - Road Debt Service 4M Fund | 99 | 513 | 2,489 | 7,169 | 202 | 1,601 | 0 | (1,601) | |
| | TOTAL REVENUE | 310,099 | 260,513 | 262,489 | 177,169 | 202 | 139,101 | 275,000 | 135,899 | 50.6% |
| B: Expenditures | | | | | | | | | | |
| 6948 | Oper Trf to Street Imp Fd re. 2017 Pavement Project | 10,853 | 0 | 0 | 0 | 0 | 0 | 0 | 0 | |
| 7715 | 2014A Road Bond Principal | 0 | 0 | 165,000 | 180,000 | 0 | 195,000 | 0 | (195,000) | |
| 7735 | Interest Expense - 2014A Refunding Bonds | 104,751 | 97,250 | 94,425 | 89,250 | 40,350 | 83,625 | 0 | (83,625) | |
| 7736 | 2014A Refunding Bonds Admin Expense | (234,040) | 1,900 | 0 | 0 | 0 | 500 | 0 | (500) | |
| 7741 | 2017B Road Tax Abate Bds Issue/Admin Expense | 0 | 0 | 0 | 1,882 | 0 | 0 | 0 | 0 | |
| 7742 | Interest Expense - 2017B Road Tax Abate Bds | 0 | 0 | 0 | 0 | 0 | 0 | 0 | 0 | |
| | TOTAL EXPENDITURES | (118,437) | 99,150 | 259,425 | 271,132 | 40,350 | 279,125 | 0 | (279,125) | |
| **Net 725 2014A ROAD PAVING DEBT SERV FD** | | 428,536 | 161,363 | 3,064 | (93,963) | (40,148) | (140,024) | 275,000 | 415,024 | -50.9% |

# City of Afton

## Statement of Revenue and Expenditures

## General Fund Summary plus Detail for All Other Funds

## Year to Date 7/31/19

| | | Audited 2015 | Audited 2016 | Audited 2017 | Audited 2018 | Month(s) of Jul-19 | YTD Actual 7/31/19 | Annual Budget 2019 | Remaining Budget $ | YTD Act as % of Annual Budget |
|---|---|---|---|---|---|---|---|---|---|---|
| **#726 2017B ROAD DEBT SERV FD** | | | | | | | | | | |
| A: Revenues | | | | | | | | | | |
| 4726 | Levy 2017B Road Bond | 0 | 0 | 0 | 480,000 | 0 | 195,000 | 390,000 | 195,000 | 50.0% |
| xxxx | Interest Income - 4M Fund | 0 | 0 | 0 | 58 | 86 | 884 | 0 | (884) | |
| xxxx | | 0 | 0 | 0 | 0 | 0 | 0 | 0 | 0 | |
| | TOTAL REVENUE | 0 | 0 | 0 | 480,058 | 86 | 195,884 | 390,000 | 194,116 | 50.2% |
| B: Expenditures | | | | | | | | | | |
| 7742 | 2017B Road Bond Int Exp | 0 | 0 | 0 | 88,735 | 33,688 | 70,575 | 0 | (70,575) | |
| 7747 | 2017B Road Bond Admin Exp | 0 | 0 | 0 | 1,936 | 0 | 0 | 0 | 0 | |
| 7716 | 2017B Road Bond Principal | 0 | 0 | 0 | 0 | 0 | 320,000 | 0 | (320,000) | |
| | TOTAL EXPENDITURES | 0 | 0 | 0 | 90,671 | 33,688 | 390,575 | 0 | (390,575) | |
| **Net 726 2017B ROAD DEBT SERV FD** | | 0 | 0 | 0 | 389,387 | (33,601) | (194,691) | 390,000 | 584,691 | -49.9% |

# City of Afton

## Statement of Revenue and Expenditures

## General Fund Summary plus Detail for All Other Funds

## Year to Date 7/31/19

| | | Audited 2015 | Audited 2016 | Audited 2017 | Audited 2018 | Month(s) of Jul-19 | YTD Actual 7/31/19 | Annual Budget 2019 | Remaining Budget $ | YTD Act as % of Annual Budget |
|---|---|---|---|---|---|---|---|---|---|---|
| **#805 CITY INFRASTRUCTURE IMP FD** | | | | | | | | | | |
| A: Revenues | | | | | | | | | | |
| 4917 | Interest Income | 395 | 4,602 | 3,306 | 1,821 | 1,336 | 9,699 | 0 | (9,699) | |
| 4829 | 2017A Dwntwn Tmp Bond Proceeds | 0 | 0 | 1,980,000 | 0 | 0 | 0 | 0 | 0 | |
| 4849 | DNR BWSR Grant | 0 | 0 | 0 | 84,710 | 0 | 0 | 0 | 0 | |
| 4852 | VBWD Grant $50M/Yr for 10 Yrs | 0 | 50,000 | 50,000 | 100,000 | 0 | 0 | 50,000 | 50,000 | 0.0% |
| 4853 | Wash Cty Share Downtown/Village Road Project | 0 | 0 | 4,092,589 | 33,610 | 0 | 21,366 | 0 | (21,366) | |
| 486x | CWRF and PSIG Grant & Loan Proceeds | 0 | 0 | 6,788,796 | 1,191,225 | 0 | 275,023 | 0 | (275,023) | |
| 4894 | DNR Flood Imp Grant | 0 | 0 | 1,611,106 | 500 | 0 | 1,280,016 | 0 | (1,280,016) | |
| 4895 | PFA/Imp Bd Levy | 48,937 | 98,000 | 0 | 0 | 0 | 0 | 0 | 0 | |
| 4896 | DNR Flood Imp Grant Match - Tax Levy | 95,000 | 95,000 | 95,000 | 95,000 | 0 | 47,500 | 95,000 | 47,500 | 50.0% |
| | TOTAL REVENUE | 144,332 | 247,602 | 14,620,797 | 1,506,866 | 1,336 | 1,633,604 | 145,000 | (1,488,604) | 1126.6% |
| B: Expenditures | | | | | | | | | | |
| 8871 | Wetland Credits | 0 | 0 | 51,748 | 0 | 0 | 0 | 0 | 0 | |
| 8891 | Downtown Property Purchase/Expense | 0 | 1,727 | 541 | 368 | 33 | 237 | 0 | (237) | |
| 8892 | Dwntown Imp - Easements & Damages | 0 | 9,200 | 33,121 | 0 | 6,584 | 11,584 | 0 | (11,584) | |
| 8893 | Single Audit Expense | | | | 2,000 | 0 | 1,600 | 0 | (1,600) | |
| 8894 | Septic Permits, Fees, Admin | 0 | 85,087 | 116,239 | 4,177 | 0 | 6,963 | 0 | (6,963) | |
| 8895 | DNR Flood Imp Proj - Engineering | 0 | 67,891 | 14,066 | 0 | 0 | 0 | 0 | 0 | |
| 8896 | Sanitary Sewer Improvements | 0 | 152,851 | 73,817 | 14,580 | 632 | 1,639 | 0 | (1,639) | |
| 8897 | Septic Construction Engineering | 0 | 8,545 | 151,858 | 39,660 | 0 | 3,484 | 0 | (3,484) | |
| 8898 | Flood Mitigation/ROW Services | 1,240,442 | 18,935 | 14,086 | 0 | 0 | 0 | 0 | 0 | |
| 8899 | Village Improvements | 0 | 22,670 | 1,305,268 | 431,585 | 1,963 | 24,874 | 0 | (8,545) | |
| 8901 | Septic Construction | 0 | 0 | 12,047,009 | 1,596,291 | 0 | (47,775) | 0 | (8,545) | |
| | TOTAL EXPENDITURES | 1,240,442 | 366,905 | 13,807,751 | 2,088,660 | 9,212 | 2,606 | 0 | (42,598) | |
| C: Oth Fin Sources (Uses)/Trfs incl Debt Service | | | | | | | | | | |
| 4848 | Trf from Park Reserve Fd | 0 | 0 | 805,497 | 0 | 0 | 0 | 0 | 0 | |
| xxxx | 2015A & 2017B Bonds | 0 | (1,608) | (3,786,795) | (120,745) | 0 | 0 | 0 | 0 | |
| | TOTAL OTH FIN SOURCES (USES) | 0 | (1,608) | (2,981,297) | (120,745) | 0 | 0 | 0 | 0 | |
| **Net 800 CITY INFRASTRUCTURE IMP FD** | | (1,096,109) | (120,911) | (2,168,252) | (702,539) | (7,876) | 1,630,998 | 145,000 | (1,446,006) | 1124.8% |

# City of Afton

## Statement of Revenue and Expenditures

## General Fund Summary plus Detail for All Other Funds

## Year to Date 7/31/19

| | | Audited 2015 | Audited 2016 | Audited 2017 | Audited 2018 | Month(s) of Jul-19 | YTD Actual 7/31/19 | Annual Budget 2019 | Remaining Budget $ | YTD Act as % of Annual Budget |
|---|---|---|---|---|---|---|---|---|---|---|
| **#806 PFA LOAN DEBT SERV FUND** | | | | | | | | | | |
| A: Revenues | | | | | | | | | | |
| 4879 | Sanitary Sewer Spec Assessments | 0 | 0 | 102,054 | 295,941 | 0 | 75,994 | 0 | (75,994) | |
| 4899 | Levy PFA Loan Debt Serv | 0 | 0 | 70,000 | 27,000 | 0 | 35,000 | 70,000 | 35,000 | 50.0% |
| xxxx | Interest Income - 4M Fund | 0 | 0 | 0 | 19 | 518 | 3,841 | 0 | (3,841) | |
| xxxx | | 0 | 0 | 0 | 0 | 0 | 0 | 0 | 0 | |
| | TOTAL REVENUE | 0 | 0 | 172,054 | 322,960 | 518 | 114,835 | 70,000 | (44,835) | 164.1% |
| B: Expenditures | | | | | | | | | | |
| 7744 | 2017 L054 Storm Wtr PFA Int Exp | 0 | 0 | 0 | 7,052 | 0 | 4,624 | 0 | (4,624) | |
| 7745 | 2017 L055 Sanitary Sewer PFA Int Exp | 0 | 0 | 0 | 11,739 | 0 | 5,786 | 0 | (5,786) | |
| 7743 7746 | 2017 Sanitary Sewer PFA Issue/Admin Exp | 0 | 0 | 16,061 | 0 | 0 | 850 | 0 | (850) | |
| 7749 | Dwntwn Imp - Special Assessmt Exp | 0 | 0 | 105,179 | 54,595 | 10,320 | 48,888 | 0 | (48,888) | |
| 7754 | 2017 L054 Storm Wtr PFA Principal | 0 | 0 | 0 | 24,815 | 0 | 0 | 0 | 0 | |
| 7755 | 2017 L055 Sanitary Sewer PFA Principal | 0 | 0 | 0 | 28,959 | 0 | 0 | 0 | 0 | |
| 7743 | | 0 | 0 | 0 | 0 | 0 | 0 | 0 | 0 | |
| | TOTAL EXPENDITURES | 0 | 0 | 121,240 | 127,159 | 10,320 | 60,147 | 0 | (60,147) | |
| **Net 806 PFA LOAN DEBT SERV FUND** | | 0 | 0 | 50,814 | 195,801 | (9,802) | 54,688 | 70,000 | 15,312 | 78.1% |
| **#807 DOWNTWN TMP IMP DEBT SERV FD** | | | | | | | | | | |
| A: Revenues | | | | | | | | | | |
| 4898 | Levy Dwntwn Tmp Imp Bond | 0 | 0 | 28,000 | 73,000 | 0 | 18,500 | 37,000 | 18,500 | 50.0% |
| 4926 | Interest Income - 4M Fund | 0 | 0 | 0 | 2 | 89 | 494 | 0 | (494) | |
| 6854 | Trf fr General Fund | 0 | 0 | 0 | 15,000 | 0 | 0 | 0 | 0 | |
| | TOTAL REVENUE | 0 | 0 | 28,000 | 88,002 | 89 | 18,994 | 37,000 | 18,006 | 51.3% |
| B: Expenditures | | | | | | | | | | |
| 7737 | 2017A Dwntwn Imp Bond Int Exp | 0 | 0 | 7,041 | 2,332 | 0 | 810 | 0 | (810) | |
| 7739 | 2017A Dwntwn Imp Bond Int Exp | 0 | 0 | 16,027 | 30,690 | 0 | 15,345 | 0 | (15,345) | |
| xxxx | | 0 | 0 | 0 | 0 | 0 | 0 | 0 | 0 | |
| | TOTAL EXPENDITURES | 0 | 0 | 23,068 | 33,022 | 0 | 16,155 | 0 | (16,155) | |
| **Net 807 DOWNTOWN TMP IMP DEBT SERV FUN** | | 0 | 0 | 4,932 | 54,980 | 89 | 2,839 | 37,000 | 34,161 | 7.7% |

# City of Afton

## Statement of Revenue and Expenditures

## General Fund Summary plus Detail for All Other Funds

## Year to Date 7/31/19

| | | Audited 2015 | Audited 2016 | Audited 2017 | Audited 2018 | Month(s) of Jul-19 | YTD Actual 7/31/19 | Annual Budget 2019 | Remaining Budget $ | YTD Act as % of Annual Budget |
|---|---|---|---|---|---|---|---|---|---|---|
| **#810 CITY DOCK FUND** | | | | | | | | | | |
| A: Revenues | | | | | | | | | | |
| 4812 | Lease of City Docks | 3,850 | 3,850 | 3,850 | 3,850 | 0 | 3,850 | 3,850 | 0 | 100.0% |
| 4909 | Interest Income - 4M Fund | 25 | 125 | 435 | 1,133 | 121 | 839 | 0 | (839) | |
| | TOTAL REVENUE | 3,875 | 3,975 | 4,285 | 4,983 | 121 | 4,689 | 3,850 | (839) | 121.8% |
| B: Expenditures | | | | | | | | | | |
| 8930 | Dock Improvements | 0 | 0 | 0 | 3,920 | 0 | 0 | 0 | 0 | |
| | TOTAL EXPENDITURES | 0 | 0 | 0 | 3,920 | 0 | 0 | 0 | 0 | |
| **Net 810 CITY DOCK FUND** | | 3,875 | 3,975 | 4,285 | 1,063 | 121 | 4,689 | 3,850 | (839) | 121.8% |

# City of Afton

## Detail Statement of Revenue and Expenditures - General Fund Only

## Year to Date 7/31/19

| | | Audited 2014 | Audited 2015 | Audited 2016 | Audited 2017 | Audited 2018 | Month(s) of Jul-19 | YTD Actual 7/31/19 | Annual Budget 2019 | Remaining Budget $ | YTD Act as % of Annual Budget | Annual Budget 2018 | Annual Budget 2017 |
|---|---|---|---|---|---|---|---|---|---|---|---|---|---|
| **#100 GENERAL FUND** | | | | | | | | | | | | | |
| 1-PROPERTY TAXES: | | | | | | | | | | | | | |
| 4000 | Current Tax Levy | 860,094 | 899,578 | 961,378 | 974,335 | 984,222 | 0 | 588,754 | 1,051,047 | 462,293 | 56.0% | 1,007,067 | 1,003,443 |
| 4005 | Fiscal Disparity | 47,649 | 44,904 | 44,674 | 46,265 | 54,350 | 0 | 43,491 | 63,420 | 19,929 | 68.6% | 55,664 | 49,525 |
| 4015 | Delinq Taxes, Penalties, Int & Adj | 17,950 | 5,456 | 23,892 | 10,629 | 17,503 | 0 | 10,135 | 0 | (10,135) | | 0 | 0 |
| 4013 | Street Improvement Capital Fund | 200,000 | 200,000 | 200,000 | 375,000 | 70,000 | 0 | 60,250 | 120,500 | 60,250 | 50.0% | 70,000 | 375,000 |
| 6928 | Special Reserve Fund | 294 | 5,000 | 3,000 | 9,500 | 5,000 | 0 | 100 | 100 | 0 | 100.0% | 5,000 | 9,500 |
| 6932 | Stormwater Fund | 3,500 | 3,500 | 3,500 | 3,500 | 3,500 | 0 | 1,750 | 3,500 | 1,750 | 50.0% | 3,500 | 3,500 |
| 6933 | Vehicle/Equipment Replacement Fund | 2,500 | 2,500 | 2,500 | 2,500 | 2,500 | 0 | 1,250 | 2,500 | 1,250 | 50.0% | 2,500 | 2,500 |
| 6935 | Comprehensive Plan | 2,000 | 2,000 | 3,000 | 4,000 | 4,000 | 0 | 2,000 | 4,000 | 2,000 | 50.0% | 4,000 | 4,000 |
| 6936 | Flood Fund | 5,500 | 5,500 | 5,500 | 5,500 | 5,500 | 0 | 2,750 | 5,500 | 2,750 | 50.0% | 5,500 | 5,500 |
| 6937 | DNR Grant Match | 95,000 | 95,000 | 95,000 | 95,000 | 95,000 | 0 | 47,500 | 95,000 | 47,500 | 50.0% | 95,000 | 95,000 |
| 6934 | Codification | 100 | 100 | 100 | 100 | 100 | 0 | 250 | 500 | 250 | 50.0% | 100 | 100 |
| 4843 | MN Unemployment Claims | 3,000 | 3,000 | 1,000 | 1,000 | 1,000 | 0 | 500 | 1,000 | 500 | 50.0% | 1,000 | 1,000 |
| 4847 | Election Fund | 5,500 | 5,500 | 5,500 | 5,500 | 5,500 | 0 | 2,750 | 5,500 | 2,750 | 50.0% | 5,500 | 5,500 |
| 6910 | City Council Contingency Fund | 0 | 0 | 0 | 0 | 0 | 0 | 0 | 0 | 0 | | 0 | 0 |
| 4842 | Audit and Legal Reserve | 100 | 100 | 1,000 | 1,000 | 1,000 | 0 | 100 | 100 | 0 | 100.0% | 1,000 | 1,000 |
| 4844 | Parks Capital Repairs/Trail & Ped Bridge | 5,500 | 5,500 | 5,500 | 5,500 | 5,500 | 0 | 2,750 | 5,500 | 2,750 | 50.0% | 5,500 | 5,500 |
| 4022 | Afton Septic System - City Bldgs | 15,000 | 15,000 | 15,000 | 15,000 | 15,000 | 0 | 7,500 | 15,000 | 7,500 | 50.0% | 15,000 | 15,000 |
| 4017 | Bridge Replacement Fund | 0 | 0 | 0 | 0 | 49,671 | 0 | 25,000 | 50,000 | 25,000 | 50.0% | 49,671 | 0 |
| 4846 | Sidewalk | 2,000 | 2,000 | 2,000 | 2,000 | 2,000 | 0 | 250 | 500 | 250 | 50.0% | 2,000 | 2,000 |
| 4012 | Bldg & Land Capital Fund | 6,000 | 6,000 | 6,000 | 6,000 | 6,000 | 0 | 3,000 | 6,000 | 3,000 | 50.0% | 6,000 | 6,000 |
| 4818 | City Share High Speed Internet | 0 | 0 | 75,000 | 50,000 | 0 | 0 | 0 | 0 | 0 | | 0 | 50,000 |
| 4050 | Debt Service Levy, Fire Hall Remodeling | 57,356 | 57,933 | 49,893 | 49,833 | 49,784 | 0 | 24,812 | 49,624 | 24,812 | 50.0% | 49,784 | 49,833 |
| 4898 | Debt Serv Levy - Downtown Imp Tmp Bond | 0 | 0 | 28,000 | 28,000 | 30,000 | 0 | 18,500 | 37,000 | 18,500 | 50.0% | 30,000 | 28,000 |
| 4899 | Debt Serv Levy - Downtown Imp PFA Loans | 0 | 8,000 | 70,000 | 70,000 | 70,000 | 0 | 35,000 | 70,000 | 35,000 | 50.0% | 70,000 | 70,000 |
| 4726 | Debt Serv Levy - 2017B Road Bond | 0 | 0 | 0 | 0 | 390,000 | 0 | 195,000 | 390,000 | 195,000 | 50.0% | 390,000 | 0 |
| 4725 | Debt Serv Levy - 2014A Road Bond | 305,000 | 310,000 | 260,000 | 260,000 | 260,000 | 0 | 137,500 | 275,000 | 137,500 | 50.0% | 260,000 | 260,000 |
| | TOTAL PROPERTY TAXES | 1,634,042 | 1,676,572 | 1,861,437 | 2,020,162 | 2,127,129 | 0 | 1,210,892 | 2,251,291 | 1,040,399 | 53.8% | 2,133,786 | 2,041,901 |
| 2-INTERGOVERNMENTAL REVENUE: | | | | | | | | | | | | | |
| 4100 | Gravel Tax/West Lakeland Cent College | (2,374) | (2,333) | (2,160) | (2,267) | (2,510) | 0 | (2,545) | (2,400) | 145 | | (2,400) | (2,400) |
| 4108 | Market Value Credit - Ag | 5,797 | 10,033 | 9,596 | 10,423 | 10,635 | 0 | 0 | 4,000 | 4,000 | 0.0% | 4,000 | 4,000 |
| 4112 | PERA Rate Increase Aid | 634 | 634 | 634 | 634 | 634 | 317 | 317 | 634 | 317 | 50.0% | 634 | 634 |
| 4175 | Agricultural perserve credit | 659 | 663 | 1,005 | 1,064 | 568 | 0 | 0 | 500 | 500 | 0.0% | 500 | 500 |
| | TOTAL INTERGOVT REVENUES | 4,715 | 8,998 | 9,076 | 9,854 | 9,327 | 317 | (2,228) | 2,734 | 4,962 | -81.5% | 2,734 | 2,734 |
| 3-CHARGES FOR SERVICES: | | | | | | | | | | | | | |
| 4205 | Assessment Search | 50 | 20 | 80 | 60 | 80 | 0 | 40 | 35 | (5) | 114.3% | 35 | 35 |
| 4210 | Sale of City Data (Various Media) | 20 | 117 | 34 | 8 | 73 | 0 | 0 | 100 | 100 | 0.0% | 100 | 100 |
| 4215 | Rent of City Garage | 0 | 0 | 0 | 0 | 500 | 0 | 500 | 0 | (500) | | 0 | 0 |
| | TOTAL CHARGES FOR SERVICES | 70 | 137 | 114 | 68 | 653 | 0 | 540 | 135 | (405) | 400.0% | 135 | 135 |



D1

# City of Afton

## Detail Statement of Revenue and Expenditures - General Fund Only

## Year to Date 7/31/19

| | | Audited 2014 | Audited 2015 | Audited 2016 | Audited 2017 | Audited 2018 | Month(s) of Jul-19 | YTD Actual 7/31/19 | Annual Budget 2019 | Remaining Budget $ | YTD Act as % of Annual Budget | Annual Budget 2018 | Annual Budget 2017 |
|---|---|---|---|---|---|---|---|---|---|---|---|---|---|
| 4-FINES & FORFEITURES: | | | | | | | | | | | | | |
| 4300 | County Fines & Fees | 10,359 | 15,861 | 14,422 | 11,061 | 8,700 | 1,104 | 7,525 | 12,000 | 4,475 | 62.7% | 14,000 | 14,000 |
| 4305 | Other Fines & Forfeitures | 0 | 0 | 664 | 0 | 0 | 0 | 0 | 250 | 250 | 0.0% | 250 | 250 |
| | TOTAL FINES & FORFEITURES | 10,359 | 15,861 | 15,086 | 11,061 | 8,700 | 1,104 | 7,525 | 12,250 | 4,725 | 61.4% | 14,250 | 14,250 |
| 5-LICENSES, FEES, PERMITS: | | | | | | | | | | | | | |
| 4400 | Building Permit Fees - Afton | 86,885 | 117,818 | 206,416 | 193,823 | 105,130 | 36,100 | 97,031 | 86,000 | (11,031) | 112.8% | 86,000 | 86,000 |
| 4401 | Building & Eng'g Inspection Fees | 800 | 1,050 | 1,550 | 2,390 | 1,445 | 750 | 2,520 | 1,000 | (1,520) | 252.0% | 250 | 250 |
| 4404 | 4th of July permits | 250 | 0 | 0 | 0 | 0 | 0 | 0 | 0 | 0 | | 0 | 0 |
| 4405 | Pet License & Impound Fees | 335 | 1,025 | 325 | 1,055 | 230 | 40 | 625 | 300 | (325) | 208.3% | 300 | 300 |
| 4410 | Liquor Licenses | 3,000 | 3,000 | 5,023 | 3,500 | 1,750 | 0 | 3,350 | 3,000 | (350) | 111.7% | 2,600 | 2,600 |
| 4415 | Other Licenses | 413 | 260 | 589 | 1,119 | 1,496 | 50 | 569 | 350 | (219) | 162.4% | 350 | 350 |
| 4435 | Street Opening & Utility Permit Fees | 750 | 500 | 2,250 | 3,500 | 500 | 500 | 750 | 1,750 | 1,000 | 42.9% | 1,750 | 1,750 |
| 4437 | Utility Franchise Fees | 59,438 | 59,554 | 57,833 | 62,497 | 59,174 | 6,997 | 23,359 | 58,000 | 34,641 | 40.3% | 58,000 | 58,000 |
| 4440 | Zoning Fees & Permits | 10,248 | 6,965 | 7,886 | 11,475 | 5,690 | 820 | 3,630 | 3,000 | (630) | 121.0% | 3,000 | 3,000 |
| | TOTAL LICENSES, FEES, PERMITS | 162,119 | 190,172 | 281,870 | 279,359 | 175,415 | 45,257 | 131,833 | 153,400 | 21,567 | 85.9% | 152,250 | 152,250 |
| 7-MISCELLANEOUS REVENUE: | | | | | | | | | | | | | |
| 4601 | Insurance dividend | 3,208 | 3,271 | 3,972 | 998 | 471 | 0 | 0 | 2,000 | 2,000 | 0.0% | 2,000 | 2,000 |
| 4604 | Park rental & cleaning fees | 825 | 560 | 225 | 225 | 275 | 100 | 350 | 500 | 150 | 70.0% | 500 | 500 |
| 4615 | Settlements/Other Income/Transfer | 10 | 869 | 160 | 609 | 716 | 0 | 0 | 0 | 0 | | 0 | 0 |
| | TOTAL MISCELLANEOUS REVENUE | 4,043 | 4,700 | 4,357 | 1,832 | 1,462 | 100 | 350 | 2,500 | 2,150 | 14.0% | 2,500 | 2,500 |
| 9-OTHER GRANTS: | | | | | | | | | | | | | |
| 4810 | County Grant-recycling grant | 7,178 | 7,210 | 7,210 | 7,210 | 7,210 | 6,676 | 6,676 | 7,090 | 415 | 94.2% | 7,090 | 7,090 |
| 4814 | Cable Commission Grant | 1,200 | 1,200 | 1,200 | 1,500 | 1,200 | 0 | 1,200 | 1,200 | 0 | 100.0% | 1,200 | 1,200 |
| | TOTAL OTHER GRANTS | 8,378 | 8,410 | 8,410 | 8,710 | 8,410 | 6,676 | 7,876 | 8,290 | 415 | 95.0% | 8,290 | 8,290 |
| 10-INTEREST REVENUES: | | | | | | | | | | | | | |
| 4901 | Interest - 4M Fund General | 54 | 144 | 955 | 12,772 | 10,330 | 2,062 | 6,026 | 1,000 | (5,026) | 602.6% | 1,000 | 50 |
| | TOTAL INTEREST REVENUES | 54 | 144 | 955 | 12,772 | 10,330 | 2,062 | 6,026 | 1,000 | (5,026) | 602.6% | 1,000 | 50 |
| | **TOTAL REVENUES** | 1,823,780 | 1,904,993 | 2,181,305 | 2,343,817 | 2,341,426 | 55,515 | 1,362,813 | 2,431,600 | 1,068,787 | 56.0% | 2,314,945 | 2,222,110 |



D2

# City of Afton

## Detail Statement of Revenue and Expenditures - General Fund Only

## Year to Date 7/31/19

| | | Audited 2014 | Audited 2015 | Audited 2016 | Audited 2017 | Audited 2018 | Month(s) of Jul-19 | YTD Actual 7/31/19 | Annual Budget 2019 | Remaining Budget $ | YTD Act as % of Annual Budget | Annual Budget 2018 | Annual Budget 2017 |
|---|---|---|---|---|---|---|---|---|---|---|---|---|---|
| **B: EXPENDITURES** | | | | | | | | | | | | | |
| 1-WAGES & BENEFITS: | | | | | | | | | | | | | |
| 5002 | Mayor & Council | 13,200 | 13,400 | 13,200 | 13,200 | 13,200 | 1,100 | 7,700 | 13,200 | 5,500 | 58.3% | 13,200 | 13,200 |
| 5004 | Administrator | 81,575 | 88,150 | 91,483 | 92,150 | 92,150 | 8,258 | 56,038 | 102,100 | 46,062 | 54.9% | 99,700 | 97,759 |
| 5005 | Intern (s) | 0 | 0 | 0 | 0 | 0 | 0 | 0 | 500 | 500 | 0.0% | 500 | 4,500 |
| 5007 | Office Assistant | 17,717 | 16,059 | 18,272 | 21,793 | 23,705 | 2,055 | 13,283 | 26,800 | 13,517 | 49.6% | 20,500 | 16,556 |
| 5008 | Office Manager/Clerk | 38,593 | 38,922 | 38,798 | 28,930 | 39,171 | 4,624 | 26,890 | 54,600 | 27,710 | 49.2% | 51,535 | 44,150 |
| 5115 | Contract Office - Administration | 0 | 0 | 0 | 5,221 | 300 | 0 | 0 | | | | | |
| 5020 | Maintenance Personnel incl Vehicle Allowance | 17,849 | 17,300 | 18,816 | 24,076 | 27,916 | 2,827 | 17,177 | 40,000 | 22,823 | 42.9% | 25,400 | 24,669 |
| 5014 | FICA & Medicare | 13,425 | 17,702 | 17,854 | 18,047 | 18,133 | 1,552 | 9,929 | 18,146 | 8,217 | 54.7% | 16,129 | 15,364 |
| 5018 | Insurance Benefits (Disability) | 642 | 646 | 648 | 227 | 463 | 47 | 330 | 720 | 390 | 45.8% | 720 | 720 |
| 5037 | Other Financial Benefits | 16,200 | 26,400 | 26,400 | 26,400 | 26,400 | 2,311 | 15,841 | 26,400 | 10,559 | 60.0% | 26,400 | 26,400 |
| 5053 | PERA | 11,416 | 12,178 | 13,008 | 12,771 | 13,913 | 1,369 | 9,471 | 18,383 | 8,912 | 51.5% | 16,340 | 15,063 |
| 5024 | Workers Comp Insurance | 2,530 | 3,689 | 3,171 | 0 | 2,691 | 0 | 3,568 | 3,100 | (468) | 115.1% | 3,100 | 3,100 |
| | TOTAL WAGES & BENEFITS | 213,147 | 234,446 | 241,650 | 242,814 | 258,043 | 24,143 | 160,228 | 303,949 | 143,721 | 52.7% | 273,524 | 261,481 |
| 2-PROFESSIONAL SERVICES: | | | | | | | | | | | | | |
| 5120 | Contract - Videographer | 606 | 710 | 1,807 | 2,475 | 3,691 | 315 | 2,356 | 4,000 | 1,644 | 58.9% | 2,800 | 2,000 |
| 5302 | Assessor Fees | 20,191 | 20,716 | 21,269 | 22,215 | 23,592 | 0 | 26,015 | 24,000 | (2,015) | 108.4% | 22,700 | 21,850 |
| 5304 | Accounting fees | 13,365 | 14,375 | 15,247 | 17,130 | 17,637 | 2,400 | 14,527 | 17,350 | 2,823 | 83.7% | 16,850 | 16,500 |
| 5305 | Auditing fees | 5,350 | 5,450 | 5,350 | 6,600 | 10,875 | 360 | 10,995 | 15,000 | 4,005 | 73.3% | 8,900 | 8,700 |
| 5310 | Engineering Fees | 12,722 | 17,707 | 23,561 | 24,410 | 34,079 | 3,096 | 24,528 | 20,600 | (3,928) | 119.1% | 20,000 | 20,000 |
| 5315 | Recording fees | 151 | 46 | 0 | 0 | 552 | 46 | 184 | 300 | 116 | 61.3% | 300 | 300 |
| 5320 | Legal fees - Prosecution | 29,698 | 25,140 | 23,160 | 27,943 | 26,374 | 3,100 | 17,807 | 29,800 | 11,993 | 59.8% | 28,000 | 28,000 |
| 5321 | Legal fees - General/Civil | 13,772 | 20,447 | 21,951 | 19,082 | 21,652 | 1,400 | 12,295 | 22,000 | 9,705 | 55.9% | 22,000 | 22,000 |
| 5330 | Planning Fees | 0 | 0 | 0 | 6,200 | 5,368 | 268 | (50) | 4,120 | 4,170 | -1.2% | 4,000 | 4,000 |
| 5335 | Other Fees for Service | 0 | 0 | (433) | 1,150 | 0 | 0 | 0 | 1,500 | 1,500 | 0.0% | 1,500 | 1,500 |
| 5350 | Building Inspection Fees - Stensland | 36,910 | 48,921 | 80,054 | 82,429 | 47,634 | 15,528 | 40,772 | 34,400 | (6,372) | 118.5% | 34,400 | 34,400 |
| 5360 | Misc Dev Fees | (200) | (345) | 0 | 0 | 0 | 0 | 0 | 0 | 0 | | 0 | 0 |
| 5370 | Well Monitoring Program | 144 | 0 | 768 | 0 | 1,075 | 2,182 | 2,182 | 1,200 | (982) | 181.9% | 1,200 | 1,000 |
| 5380 | Watershed Management | 488 | 488 | 595 | 596 | 596 | 0 | 596 | 600 | 4 | 99.4% | 600 | 500 |
| | TOTAL PROFESSIONAL SERVICES | 133,198 | 153,655 | 193,329 | 210,229 | 193,126 | 28,695 | 152,207 | 174,870 | 22,663 | 87.0% | 163,250 | 160,750 |

# City of Afton

## Detail Statement of Revenue and Expenditures - General Fund Only

## Year to Date 7/31/19

| | | Audited 2014 | Audited 2015 | Audited 2016 | Audited 2017 | Audited 2018 | Month(s) of Jul-19 | YTD Actual 7/31/19 | Annual Budget 2019 | Remaining Budget $ | YTD Act as % of Annual Budget | Annual Budget 2018 | Annual Budget 2017 |
|---|---|---|---|---|---|---|---|---|---|---|---|---|---|
| 4-OTHER EXPENDITURES: | | | | | | | | | | | | | |
| 5500 | Office Equipment | 176 | 1,612 | 576 | 0 | 0 | 0 | 0 | 700 | 700 | 0.0% | 700 | 700 |
| 5505 | Bank/IRS Fees/Penalties/Sales Tax | 135 | 347 | 262 | 314 | 873 | 23 | 240 | 400 | 160 | 60.1% | 400 | 400 |
| 5510 | Comp Svc (All Hard/Software, GIS, Web, Email) | 4,825 | 5,396 | 5,610 | 6,900 | 16,830 | 2,165 | 5,499 | 9,500 | 4,001 | 57.9% | 9,500 | 9,500 |
| 5516 | Copier Lease | 6,424 | 6,796 | 3,243 | 2,760 | 2,521 | 230 | 1,610 | 3,500 | 1,890 | 46.0% | 7,000 | 7,000 |
| 5520 | Equipment Maintenance | 62 | 0 | 0 | 0 | 0 | 0 | 0 | 500 | 500 | 0.0% | 1,000 | 1,000 |
| 5525 | Insurance-General Property & Liability | 18,377 | 17,886 | 17,250 | 15,962 | 21,705 | (1,595) | 21,722 | 21,600 | (122) | 100.6% | 21,000 | 21,000 |
| 5535 | Misc. Expense | 230 | 956 | 21 | 574 | 111 | 0 | 0 | 1,500 | 1,500 | 0.0% | 2,000 | 2,000 |
| 5540 | Office Supplies | 2,673 | 2,953 | 2,631 | 3,563 | 3,230 | 786 | 2,382 | 4,000 | 1,618 | 59.5% | 4,000 | 4,000 |
| 5545 | Other Administration | 475 | 713 | 400 | 320 | 120 | 0 | 0 | 500 | 500 | 0.0% | 500 | 500 |
| 5550 | Postage | 4,816 | 3,439 | 3,281 | 3,847 | 4,266 | 987 | 1,604 | 3,500 | 1,896 | 45.8% | 3,500 | 3,500 |
| 5555 | Publishing & Printing | 2,336 | 3,656 | 2,201 | 407 | 1,143 | 99 | 635 | 2,000 | 1,365 | 31.8% | 2,800 | 2,800 |
| 5560 | Newsletter | 5,281 | 6,058 | 5,339 | 4,804 | 4,144 | 192 | 3,354 | 6,000 | 2,646 | 55.9% | 6,000 | 6,000 |
| 5565 | Telephone | 2,759 | 2,682 | 2,703 | 3,051 | 3,595 | 300 | 2,097 | 3,500 | 1,403 | 59.9% | 3,500 | 3,500 |
| 5575 | Travel & Mileage | 180 | 0 | 132 | 186 | 162 | 232 | 337 | 500 | 163 | 67.4% | 500 | 500 |
| 5580 | Membership & Dues | 2,987 | 3,158 | 3,207 | 3,229 | 3,384 | 0 | 45 | 3,200 | 3,155 | 1.4% | 3,000 | 3,000 |
| 5585 | Seminars & Education | 1,932 | 2,364 | 682 | 1,059 | 2,576 | 724 | 1,484 | 2,600 | 1,116 | 57.1% | 2,500 | 2,500 |
| | TOTAL OTHER EXPENDITURES | 53,668 | 58,017 | 47,538 | 46,974 | 64,660 | 4,142 | 41,011 | 63,500 | 22,489 | 64.6% | 67,900 | 67,900 |
| SUBTOTAL GENERAL & ADMINISTRATIVE | | 400,012 | 446,119 | 482,517 | 500,017 | 515,829 | 56,980 | 353,446 | 542,319 | 188,873 | 65.2% | 504,674 | 490,131 |
| 5-PUBLIC SAFETY: | | | | | | | | | | | | | |
| 5605 | Animal Control | 1,899 | 2,823 | 1,959 | 1,280 | 2,884 | 0 | 2,453 | 4,000 | 1,547 | 61.3% | 4,000 | 4,000 |
| 5625 | Fire & Ambulance Service | 213,705 | 219,953 | 232,893 | 243,296 | 249,166 | 65,074 | 195,222 | 260,296 | 65,074 | 75.0% | 249,166 | 243,296 |
| 5626 | Fire Relief Association | 0 | 0 | 0 | 0 | 0 | 94,506 | 94,732 | 0 | (94,732) | | 0 | 0 |
| 5636 | Police Service - Additional Patrols | 0 | 0 | 0 | 0 | 2,044 | 0 | 0 | 2,000 | 2,000 | 0.0% | 5,000 | 0 |
| 5635 | Police Service - County | 168,494 | 169,289 | 178,385 | 176,419 | 186,346 | 0 | 0 | 189,011 | 189,011 | 0.0% | 180,000 | 175,000 |
| | TOTAL PUBLIC SAFETY | 384,098 | 392,065 | 413,237 | 420,994 | 440,440 | 159,580 | 292,407 | 455,307 | 162,900 | 64.2% | 438,166 | 422,296 |
| 6-PUBLIC HEALTH: | | | | | | | | | | | | | |
| 5705 | Recycling - Afton | 150 | 268 | 1,076 | 525 | (304) | (327) | (88) | 500 | 588 | -17.6% | 500 | 500 |
| 5720 | Refuse Hauling - City Hall | 1,630 | 819 | 708 | 745 | 945 | 202 | 469 | 1,000 | 531 | 46.9% | 1,500 | 1,500 |
| | TOTAL PUBLIC HEALTH | 1,780 | 1,087 | 1,784 | 1,270 | 641 | (125) | 381 | 1,500 | 1,119 | 25.4% | 2,000 | 2,000 |

# City of Afton

## Detail Statement of Revenue and Expenditures - General Fund Only

## Year to Date 7/31/19

| | | Audited 2014 | Audited 2015 | Audited 2016 | Audited 2017 | Audited 2018 | Month(s) of Jul-19 | YTD Actual 7/31/19 | Annual Budget 2019 | Remaining Budget $ | YTD Act as % of Annual Budget | Annual Budget 2018 | Annual Budget 2017 |
|---|---|---|---|---|---|---|---|---|---|---|---|---|---|
| 7-STREETS: | | | | | | | | | | | | | |
| 5820 | Gravel Road Maintenance | 1,755 | 3,530 | 7,944 | 13,721 | 10,348 | 1,418 | 3,183 | 4,000 | 817 | 79.6% | 4,000 | 4,000 |
| 5825 | Crackseal/Seal Coat/Gravel Shouldering | 90,685 | 51,829 | 11,701 | 33,098 | 50,469 | 6,499 | 6,499 | 75,000 | 68,501 | 8.7% | 75,000 | 75,000 |
| 5830 | Snow & Ice Control | 115,692 | 62,431 | 78,910 | 76,152 | 132,082 | 3,116 | 95,982 | 113,000 | 17,018 | 84.9% | 110,000 | 110,000 |
| 5835 | Surf maint/Sweeping/Pothole Repair | 29,844 | 49,873 | 33,139 | 28,672 | 2,262 | 5,014 | 11,080 | 10,000 | (1,080) | 110.8% | 10,000 | 46,000 |
| 5845 | Brush,Tree,Mow,Bridge,Culvert,Guardrail | 25,502 | 40,117 | 21,136 | 80,978 | 45,273 | 8,443 | 22,256 | 52,000 | 29,745 | 42.8% | 50,000 | 39,000 |
| 5850 | Street Lighting | 3,982 | 4,286 | 3,164 | 4,494 | 3,397 | 67 | 1,042 | 5,500 | 4,458 | 19.0% | 12,000 | 5,000 |
| 5855 | Gas Lamps - Operating Costs | 2,851 | 2,491 | 1,889 | 1,236 | 1,393 | 0 | 0 | 0 | 0 | | 0 | 2,700 |
| 5856 | Gas Lamps - Capital | 0 | 0 | 0 | 0 | 0 | 0 | 0 | 0 | 0 | | 0 | 0 |
| 5860 | Signs & Signals | 2,977 | 3,247 | 3,413 | 2,624 | 1,879 | 403 | 7,307 | 3,500 | (3,807) | 208.8% | 4,000 | 4,000 |
| 5870 | Other - Road Maint. | 758 | 605 | 1,696 | 888 | 1,608 | 1,009 | 1,931 | 2,000 | 69 | 96.5% | 2,000 | 2,000 |
| | TOTAL STREETS | 274,047 | 218,410 | 162,992 | 241,863 | 248,711 | 25,968 | 149,279 | 265,000 | 115,721 | 56.3% | 267,000 | 287,700 |
| 9-OTHER PUBLIC WORKS EXPENDITURES: | | | | | | | | | | | | | |
| 5910 | Flood Control (Operate Pump/Dike) | 803 | 0 | 0 | 0 | 0 | 0 | 0 | 1,600 | 1,600 | 0.0% | 1,600 | 1,600 |
| 5920 | Repair & Maint - Equipment | 1,312 | 1,080 | 1,324 | 1,506 | 2,481 | 1,123 | 3,013 | 1,500 | (1,513) | 200.9% | 1,500 | 1,500 |
| 5925 | Fuel & Lubricants | 478 | 558 | 311 | 263 | 361 | 0 | 45 | 1,000 | 955 | 4.5% | 1,000 | 1,000 |
| 5930 | Tools & Minor Equipment | 243 | 277 | 275 | 95 | 375 | 0 | 0 | 950 | 950 | 0.0% | 950 | 950 |
| | TOTAL OTHER PUBLIC WORKS | 2,836 | 1,914 | 1,910 | 1,864 | 3,217 | 1,123 | 3,059 | 5,050 | 1,991 | 60.6% | 5,050 | 5,050 |
| SUBTOTAL STREETS, REHAB & PUBLIC WORKS | | 276,883 | 220,324 | 164,902 | 243,727 | 251,928 | 27,091 | 152,337 | 270,050 | 117,713 | 56.4% | 272,050 | 292,750 |
| 9-BUILDINGS & LAND: | | | | | | | | | | | | | |
| 6010 | Gas Heat | 2,060 | 1,937 | 1,071 | 533 | 0 | 0 | 0 | 2,200 | 2,200 | 0.0% | 2,200 | 2,200 |
| 6020 | Electricity | 1,822 | 1,731 | 1,635 | 2,039 | 2,750 | 167 | 2,543 | 2,000 | (543) | 127.1% | 2,000 | 2,000 |
| 6030 | Miscellaneous Expense | 777 | 1,036 | 944 | 910 | 229 | 479 | 1,352 | 800 | (552) | 169.0% | 800 | 800 |
| 6035 | Cleaning | 1,031 | 874 | 273 | 13 | 7 | 0 | 0 | 500 | 500 | 0.0% | 2,000 | 2,000 |
| 6040 | Repair & Maintenance | 898 | 1,910 | 902 | 2,644 | 2,789 | 92 | 484 | 2,000 | 1,516 | 24.2% | 2,000 | 2,000 |
| 6045 | City Garage Expense | 3,264 | 2,557 | 3,182 | 2,147 | 4,588 | 289 | 4,525 | 2,500 | (2,025) | | 2,500 | 2,500 |
| xxxx | Deputy Facility/PW Garage | 0 | 0 | 0 | 0 | 0 | 0 | 0 | 1,000 | 1,000 | 0.0% | 1,000 | 0 |
| 6050 | Supplies | 594 | 288 | 289 | 536 | 1,519 | 67 | 485 | 500 | 15 | 96.9% | 500 | 500 |
| | TOTAL BUILDINGS & LAND | 10,446 | 10,334 | 8,296 | 8,823 | 11,882 | 1,094 | 9,388 | 11,500 | 2,112 | 81.6% | 13,000 | 12,000 |

# City of Afton

## Detail Statement of Revenue and Expenditures - General Fund Only

## Year to Date 7/31/19

| | | Audited 2014 | Audited 2015 | Audited 2016 | Audited 2017 | Audited 2018 | Month(s) of Jul-19 | YTD Actual 7/31/19 | Annual Budget 2019 | Remaining Budget $ | YTD Act as % of Annual Budget | Annual Budget 2018 | Annual Budget 2017 |
|---|---|---|---|---|---|---|---|---|---|---|---|---|---|
| 12-PARKS & RECREATION: | | | | | | | | | | | | | |
| 6105 | 4th of July Celebration | 3,691 | 3,500 | 3,500 | 3,500 | 3,500 | 0 | 3,500 | 3,500 | 0 | 100.0% | 3,500 | 3,500 |
| 6135 | Park Maintenance | 1,275 | 359 | 569 | 2,587 | 3,380 | 240 | 4,514 | 1,300 | (3,214) | 347.2% | 1,200 | 1,200 |
| 6140 | Miscellaneous expense | 52 | 62 | 112 | 18 | 238 | 0 | 238 | 300 | 63 | 79.2% | 300 | 300 |
| 6205 | Cemetery maintenance | 0 | 0 | 9,000 | 9,354 | 9,000 | 0 | 9,000 | 9,000 | 0 | 100.0% | 9,000 | 9,000 |
| | TOTAL PARKS & RECREATION | 5,018 | 3,921 | 13,181 | 15,459 | 16,118 | 240 | 17,251 | 14,100 | (3,151) | 122.4% | 14,000 | 14,000 |
| **OVERALL TOTAL EXPENDITURES** | | 1,078,237 | 1,073,850 | 1,083,917 | 1,190,291 | 1,236,837 | 244,861 | 825,210 | 1,294,776 | 469,566 | 63.7% | 1,243,890 | 1,233,177 |
| **C: OTHER FINANCING SOURCES (USES)** | | | | | | | | | | | | | |
| 4725 | Tax Levy to 2014A Road Bond | (305,000) | (310,000) | (260,000) | (260,000) | (260,000) | 0 | (137,500) | (275,000) | (137,500) | | (260,000) | (260,000) |
| 4726 | Tax Levy to 2017B Road Bond | 0 | 0 | 0 | 0 | (390,000) | 0 | (195,000) | (390,000) | (195,000) | | (390,000) | 0 |
| 4898 | Tax Levy to Dwntwn Imp Tmp Bonds | 0 | 0 | (28,000) | (28,000) | (30,000) | 0 | (18,500) | (37,000) | (18,500) | | (30,000) | (28,000) |
| 4899 | Tax Levy to Dwntwn Imp PFA Loans | 0 | 0 | (70,000) | (70,000) | (70,000) | 0 | (35,000) | (70,000) | (35,000) | | (70,000) | (70,000) |
| 4050 | Tax Levy to Fire Hall Debt Service Fund | (57,356) | (57,933) | (49,893) | (49,833) | (49,784) | 0 | (24,812) | (49,624) | (24,812) | | (49,784) | (49,833) |
| 6920 | Oper trf to Bldg & Land Fund - Budgeted | (6,000) | (6,000) | (6,000) | (6,000) | (6,000) | 0 | (3,000) | (6,000) | (3,000) | | (6,000) | (6,000) |
| 6920 | Oper trf to Bldg & Land Fund - UnBudgeted | 0 | (20,000) | (25,000) | (25,000) | 0 | 0 | 0 | 0 | 0 | | 0 | 0 |
| 6921 | Oper trf to Street Imp -UnBudgeted | 0 | (43,500) | (230,000) | (100,000) | 0 | 0 | 0 | 0 | 0 | | 0 | 0 |
| 6925 | Oper trf to Street Imp -Budgeted | (200,000) | (200,000) | (200,000) | (375,000) | (70,000) | 0 | (60,250) | (120,500) | (60,250) | | (70,000) | (375,000) |
| 6928 | Oper Trf from(to) Special Reserve Fund | (294) | (5,000) | (3,000) | (9,500) | (5,000) | 0 | (100) | (100) | 0 | | (5,000) | (9,500) |
| 6932 | Oper Trf to Stormwater Fund | (3,500) | (3,500) | (3,500) | (3,500) | (3,500) | 0 | (1,750) | (3,500) | (1,750) | | (3,500) | (3,500) |
| 6933 | Oper Trf to Vehicle Fund | (2,500) | (2,500) | (2,500) | (2,500) | (2,500) | 0 | (1,250) | (2,500) | (1,250) | | (2,500) | (2,500) |
| 6935 | Oper Trf to Comprehensive Plan | (2,000) | (2,000) | (3,000) | (4,000) | (4,000) | 0 | (2,000) | (4,000) | (2,000) | | (4,000) | (4,000) |
| 6936 | Oper Trf to Flood Mitigation & Control | (5,500) | (5,500) | (5,500) | (5,500) | (5,500) | 0 | (2,750) | (5,500) | (2,750) | | (5,500) | (5,500) |
| 6937 | Oper Trf to DNR Grant Match | (95,000) | (95,000) | (95,000) | (95,000) | (95,000) | 0 | (47,500) | (95,000) | (47,500) | | (95,000) | (95,000) |
| 6934 | Oper trf to Codification (Spec Act Fd) | (100) | (100) | (100) | (100) | (100) | 0 | (250) | (500) | (250) | | (100) | (100) |
| 4843 | Oper Trf to MN Unemployment Claims | (3,000) | (3,000) | (1,000) | (1,000) | (1,000) | 0 | (500) | (1,000) | (500) | | (1,000) | (1,000) |
| 4847 | Oper Trf to Election Expense Fund | (5,500) | (5,500) | (5,500) | (5,500) | (5,500) | 0 | (2,750) | (5,500) | (2,750) | | (5,500) | (5,500) |
| 6910 | City Council Contingency Fund | 0 | 0 | 0 | (10,000) | 0 | 0 | 0 | 0 | 0 | | 0 | 0 |
| 4842 | Oper Trf to Audit and Legal Reserve | (100) | (100) | (1,000) | (1,000) | (1,000) | 0 | (100) | (100) | 0 | | (1,000) | (1,000) |
| 4844 | Oper Trf to Parks Capital Repairs/Trail & Ped Bridge | (5,500) | (5,500) | (5,500) | (5,500) | (5,500) | 0 | (2,750) | (5,500) | (2,750) | | (5,500) | (5,500) |
| 4022 | Oper Trf to Afton Septic System - City Bldgs | (15,000) | (15,000) | (15,000) | (15,000) | (15,000) | 0 | (7,500) | (15,000) | (7,500) | | (15,000) | (15,000) |
| 4818 | Oper Trf to Spec Act Fd re High Speed Internet | 0 | (8,000) | (75,000) | (50,000) | 0 | 0 | 0 | 0 | 0 | | 0 | (50,000) |
| 4846 | Oper Trf to Sidewalk | (2,000) | (2,000) | (2,000) | (2,000) | (2,000) | 0 | (250) | (500) | (250) | | (2,000) | (2,000) |
| 4017 | Oper Trf to Bridge Replacement Fund | 0 | 0 | 0 | 0 | (49,671) | 0 | (25,000) | (50,000) | (25,000) | | (49,671) | 0 |
| 6954 | Oper Trf to 807 Tmp Bond Debt Fund | 0 | 0 | 0 | 0 | (15,000) | 0 | 0 | 0 | 0 | | 0 | 0 |
| 6929 | Trf (to)/from Special Activities Fund (Various) | 0 | (15,000) | **(10,000)** | (25,000) | (15,000) | 0 | 0 | 0 | 0 | | 0 | 0 |
| | TOTAL OTH FINANCING/TRANSFERS | (708,350) | (805,133) | (1,096,493) | (1,148,933) | (1,101,055) | 0 | (568,512) | (1,136,824) | (568,312) | | (1,071,055) | (988,933) |
| **REVENUES OVER (UNDER) EXPENDITURES** | | **37,193** | **26,010** | **895** | **4,594** | **3,534** | **(189,346)** | **(30,910)** | **$0** | **30,910** | | **$0** | **$0** |
| | Fund Balance - Beginning of Period | **264,114** | **301,307** | **327,317** | **328,212** | **332,805** | | **$336,339** | | | | | |
| | Fund Balance - End of Period | **301,307** | **327,317** | **328,212** | **332,805** | **336,339** | | **$305,430** | | | | | |



D6

# *City of Afton*
## *Summary of Special Activities and MN Investment Funds*
## *YTD 7/31/19*

| | Balance 12/31/2013 | Balance 12/31/2014 | Balance 12/31/2015 | Balance 12/31/2016 | Balance 12/31/2017 | Balance 12/31/2018 | Receipts | Disbursements | Transfers | Balance 7/31/2019 |
|---|---|---|---|---|---|---|---|---|---|---|
| #550 Special Activities Fund - General | | | | | | | | | | |
| A. Interest (unallocated) | 3,848.46 | 3,871.67 | 3,930.92 | 4,394.61 | 6,100.51 | 12,372.80 | 4,226.85 | | | 16,599.65 |
| B2. 4th of July Reserve | 0.00 | 0.00 | 0.00 | 0.00 | 0.00 | 0.00 | | | | 0.00 |
| B3. City Council Contingency Reserve | 13,452.60 | 10,975.00 | 9,775.00 | 4,768.56 | 10,229.76 | 853.12 | 8,092.75 | 3,168.50 | | 5,777.37 |
| B4. Community Garden | (87.88) | (87.88) | (0.00) | (0.00) | (0.00) | (0.00) | | | | (0.00) |
| B4. MN Historic Preservation Design Guidelines | 0.00 | 0.00 | 8,000.00 | (225.00) | (225.00) | (225.00) | | | | (225.00) |
| B5. Afton Residents for Preservation & Conservation | 0.00 | 0.00 | 0.00 | 0.00 | 1,500.00 | 1,500.00 | | | | 1,500.00 |
| C1. Codification | 3,650.20 | 3,750.20 | 3,850.20 | 3,950.20 | 4,050.20 | 4,150.20 | 250.00 | | | 4,400.20 |
| C2. Comprehensive Plan | 7,673.28 | 8,155.36 | 1,947.36 | 4,947.36 | 18,947.36 | 17,898.61 | 2,000.00 | 1,383.00 | | 18,515.61 |
| D1. Flood Control (Acct 7836) | 8,445.20 | 5,063.99 | 17,004.27 | 22,304.27 | 27,804.27 | 33,304.27 | 2,750.00 | 2,123.91 | | 33,930.36 |
| D2. Storm Water Control | 17,933.70 | 21,433.70 | 24,933.70 | 28,433.70 | 31,933.70 | 37,433.70 | 1,750.00 | | | 39,183.70 |
| D3. Snow & Ice Reserve | 0.00 | 0.00 | 15,000.00 | 15,000.00 | 30,000.00 | 30,000.00 | | | | 30,000.00 |
| D6. TAG Wastewater Comm Assessmnt (Acct 7833) | (15,982.34) | (15,982.34) | 0.00 | 0.00 | 0.00 | 0.00 | | | | 0.00 |
| E. Charitable Gaming Fund | 0.00 | 0.00 | 0.00 | 84.47 | 495.80 | 746.17 | | | | 746.17 |
| F. Applicant Pass-Thru Expenses | 0.00 | 0.00 | 0.00 | 0.00 | 0.00 | 0.00 | | | | 0.00 |
| G. TIF Dist No. 1 (Afton Market Square) | 849.01 | 849.01 | 0.00 | 0.00 | 0.00 | 0.00 | | | | 0.00 |
| I. City Vehicles | 1,648.96 | 4,148.96 | 6,648.96 | 9,148.96 | 9,214.39 | 10,395.39 | 5,159.75 | 9,900.00 | | 5,655.14 |
| K. Audit/Legal Reserve | 38,336.57 | 38,436.57 | 38,536.57 | 39,536.57 | 40,536.57 | 35,719.38 | 100.00 | | | 35,819.38 |
| L. MN UI Claims, Severance & Oth PTO | 20,788.53 | 23,788.53 | 26,788.53 | 27,788.53 | 28,788.53 | 29,788.53 | 500.00 | | | 30,288.53 |
| M. Parks Capital, Pedestrian Bike Trail & Bridge | 10,959.94 | 16,459.94 | 21,959.94 | 27,459.94 | 27,959.94 | 33,459.94 | 2,750.00 | | | 36,209.94 |
| N. Election Expense | 6,402.20 | 5,780.27 | 11,159.33 | 9,452.67 | 13,402.67 | 5,311.65 | 2,750.00 | 1,554.90 | | 6,506.75 |
| O. Sidewalk | 8,000.00 | 10,000.00 | 12,000.00 | 14,000.00 | 16,000.00 | 18,000.00 | 250.00 | | | 18,250.00 |
| P. High Speed Internet | 0.00 | 0.00 | 0.00 | 0.00 | 124,850.00 | 124,850.00 | | | | 124,850.00 |
| Total #550 Special Activities Fund - General | 125,918.43 | 136,642.98 | 201,534.78 | 211,044.84 | 391,588.70 | 395,558.76 | 30,579.35 | 18,130.31 | 0.00 | 408,007.80 |
| #560 Special Activities Fund - Other | | | | | | | | | | |
| A. State Fire Aid (Pass-Thru) | 0.00 | 0.00 | 0.00 | 0.00 | 0.00 | 0.00 | 1,000.00 | 1,000.00 | | 0.00 |
| B. Community Communications | 23,978.90 | 18,378.87 | 24,889.73 | 13,549.11 | 12,083.74 | (0.00) | 11,561.00 | 2,114.44 | | 9,446.56 |
| C. Interest (Unallocated) | 0.00 | 0.00 | 0.00 | 0.00 | 0.00 | 2.13 | 22.78 | | | 24.91 |
| Total #550 Special Activities Fund | 23,978.90 | 18,378.87 | 24,889.73 | 13,549.11 | 12,083.74 | 2.13 | 12,583.78 | 3,114.44 | 0.00 | 9,471.47 |
| #600 MN Investment Fund | | | | | | | | | | |
| 4886/8986 Chandler Exhibits | 100,985.08 | 104,361.13 | 104,409.10 | 104,635.25 | 105,377.87 | 107,167.55 | 1,173.36 | | 0.00 | 108,340.91 |
| Total #600 MN Investment Fund | 100,985.08 | 104,361.13 | 104,409.10 | 104,635.25 | 105,377.87 | 107,167.55 | 1,173.36 | 0.00 | 0.00 | 108,340.91 |

# City of Afton
## #550 General Special Activities Fund - Detail by Account
### January through July 2019

| Type | Date | Num | Source Name | Memo | Debit | Credit | Balance |
|---|---|---|---|---|---|---|---|
| **4842 · Oper Trf Audit/Legal Reserve** | | | | | | | |
| Depo... | 06/30/2019 | | | Audit and Legal | | 100.00 | 100.00 |
| Total 4842 · Oper Trf Audit/Legal Reserve | | | | | 0.00 | 100.00 | 100.00 |
| **4843 · Oper Trf - MN Unemploy Claims** | | | | | | | |
| Depo... | 06/30/2019 | | | MN Unemployment Claims | | 500.00 | 500.00 |
| Total 4843 · Oper Trf - MN Unemploy Claims | | | | | 0.00 | 500.00 | 500.00 |
| **4844 · Oper Trf - Pedestrian Bike Trai** | | | | | | | |
| Depo... | 06/30/2019 | | | Parks Capital | | 2,750.00 | 2,750.00 |
| Total 4844 · Oper Trf - Pedestrian Bike Trai | | | | | 0.00 | 2,750.00 | 2,750.00 |
| **4846 · Oper Trf in - Sidewalk** | | | | | | | |
| Depo... | 06/30/2019 | | | Sidewalk | | 250.00 | 250.00 |
| Total 4846 · Oper Trf in - Sidewalk | | | | | 0.00 | 250.00 | 250.00 |
| **4847 · Oper Trf In - Election Levy** | | | | | | | |
| Depo... | 06/30/2019 | | | Elections | | 2,750.00 | 2,750.00 |
| Total 4847 · Oper Trf In - Election Levy | | | | | 0.00 | 2,750.00 | 2,750.00 |
| **4914 · Special Activity - Interest** | | | | | | | |
| Gene... | 01/31/2019 | interest | | Interest Income | | 723.48 | 723.48 |
| Gene... | 02/28/2019 | interest | | Interest Income | | 652.10 | 1,375.58 |
| Gene... | 03/31/2019 | interest | | Interest Income | | 721.77 | 2,097.35 |
| Gene... | 04/30/2019 | interest | | Interest Income | | 713.85 | 2,811.20 |
| Gene... | 05/31/2019 | interest | | Interest Income | | 723.62 | 3,534.82 |
| Gene... | 06/30/2019 | interest | | Interest Income | | 692.03 | 4,226.85 |
| Gene... | 07/31/2019 | interest | | Interest Income | | 707.40 | 4,934.25 |
| Total 4914 · Special Activity - Interest | | | | | 0.00 | 4,934.25 | 4,934.25 |
| **4950 · 10% Charitable Gaming Tax** | | | | | | | |
| Depo... | 07/02/2019 | 12850 | | Merrick May 2019: Lumberyard Pub | | 28.00 | 28.00 |
| Total 4950 · 10% Charitable Gaming Tax | | | | | 0.00 | 28.00 | 28.00 |
| **6932 · Oper Trf - Stormwater Run-off** | | | | | | | |
| Depo... | 06/30/2019 | | | Stormwater | | 1,750.00 | 1,750.00 |
| Total 6932 · Oper Trf - Stormwater Run-off | | | | | 0.00 | 1,750.00 | 1,750.00 |
| **6933 · Oper Trf - City Vehicles** | | | | | | | |
| Depo... | 05/28/2019 | 13129 | | Houghton's Auction Service: Sale of Flood Pump Total $7,819.50 | | 3,909.75 | 3,909.75 |
| Depo... | 06/30/2019 | | | City Vehicles | | 1,250.00 | 5,159.75 |
| Total 6933 · Oper Trf - City Vehicles | | | | | 0.00 | 5,159.75 | 5,159.75 |
| **6934 · Oper Trf - Codification** | | | | | | | |
| Depo... | 06/30/2019 | | | Codification | | 250.00 | 250.00 |
| Total 6934 · Oper Trf - Codification | | | | | 0.00 | 250.00 | 250.00 |
| **6935 · Oper Trf - Comprehensive Plan** | | | | | | | |
| Depo... | 06/30/2019 | | | Comp Plan | | 2,000.00 | 2,000.00 |
| Total 6935 · Oper Trf - Comprehensive Plan | | | | | 0.00 | 2,000.00 | 2,000.00 |
| **6936 · Oper Trf - Flood Control** | | | | | | | |
| Depo... | 06/30/2019 | | | Flood Control | | 2,750.00 | 2,750.00 |
| Total 6936 · Oper Trf - Flood Control | | | | | 0.00 | 2,750.00 | 2,750.00 |
| **5978 · City Vehicle - JD Z950M ZTrak** | | | | | | | |
| Bill | 05/31/2019 | 06264430 05092019 | Frontier Ag & Turf (Hastings) | John Deere Z950M ZTrak w Z-Glide Front Suspension Kit | 9,900.00 | | (9,900.00) |

F1

# City of Afton
## #550 General Special Activities Fund - Detail by Account
### January through July 2019

| Type | Date | Num | Source Name | Memo | Debit | Credit | Balance |
|---|---|---|---|---|---|---|---|
| Total 5978 · City Vehicle - JD Z950M ZTrak | | | | | 9,900.00 | 0.00 | (9,900.00) |
| **6347 · Elections Expense** | | | | | | | |
| Payc... | 01/14/2019 | 23040 | Arco, Laurie | | 35.00 | | (35.00) |
| Payc... | 01/14/2019 | 23040 | Arco, Laurie | | 4.90 | | (39.90) |
| Gene... | 01/14/2019 | Wages | 100 Gen'l Fd:B. Exp:B01 G & A:B1.1 Wages & Ben... | 2018 Accrual: Laurie Arco | | 35.00 | (4.90) |
| Bill | 01/31/2019 | 151940 | Wash Cty (Elections) | 2019 Automark Ext Maint Fees | 1,550.00 | | (1,554.90) |
| Gene... | 07/15/2019 | PRExpReimb | | Julie Yoho: Election expense | 12.41 | | (1,567.31) |
| Total 6347 · Elections Expense | | | | | 1,602.31 | 35.00 | (1,567.31) |
| **6356 · Comp Plan Expenses** | | | | | | | |
| Bill | 02/28/2019 | 6 | WSB (SWMP Updates) | SWMP update R-011680-000 | 838.00 | | (838.00) |
| Bill | 06/30/2019 | 7 | WSB (SWMP Updates) | SWMP update R-011680-000 | 545.00 | | (1,383.00) |
| Total 6356 · Comp Plan Expenses | | | | | 1,383.00 | 0.00 | (1,383.00) |
| **6366 · City Council Contingency Exp** | | | | | | | |
| Bill | 02/27/2019 | AcctRFPa | Niedzwiecki, Thomas H. | Assistance re. Acct RFP including prep and attendance at interviews | 400.00 | | (400.00) |
| Depo... | 02/28/2019 | 10016548 | | LMCIT: Claim 68150 Lightning damage less $250 deductible | | 4,183.00 | 3,783.00 |
| Bill | 04/30/2019 | 60992 | Minuteman Press | Street Banners (grand opening re. projects) | 1,268.50 | | 2,514.50 |
| Bill | 04/30/2019 | 2019 Contribution | Youth Service Bureau | YSB Services - 2019 | 1,500.00 | | 1,014.50 |
| Depo... | 05/28/2019 | 13129 | | Houghton's Auction Service: Sale of Flood Pump Total $7,819.50 | | 3,909.75 | 4,924.25 |
| Depo... | 07/31/2019 | 177420 | | LMC City of Excellence Award | | 1,000.00 | 5,924.25 |
| Total 6366 · City Council Contingency Exp | | | | | 3,168.50 | 9,092.75 | 5,924.25 |
| **7800 · Flood, Storm Wtr & Snow Ice** | | | | | | | |
| **7836 · Flood & Storm Wtr Exp - Gen'l** | | | | | | | |
| Bill | 03/31/2019 | 601 | Tri-County Services (Streets, Other) | Dig out pumps old shop move to shop. install new battery for pump getting sold | 955.00 | | (955.00) |
| Bill | 03/31/2019 | 600 | Tri-County Services (Streets, Other) | install flood gate | 650.00 | | (1,605.00) |
| Bill | 04/17/2019 | 3000807983 | Centerpoint Energy | 15995 Upper 34th St S: install service and meter | 0.00 | | (1,605.00) |
| Bill | 04/17/2019 | 3000807983 | Centerpoint Energy | 15995 Upper 34th St S: out of season charge | 0.00 | | (1,605.00) |
| Bill | 04/17/2019 | 3000807983 | Centerpoint Energy | 15995 Upper 34th St S: Vac Truck frost burner charge | 0.00 | | (1,605.00) |
| Bill | 04/17/2019 | 96769 | Menards - Hudson | toughstuff brackets and tightmesh | 68.91 | | (1,673.91) |
| Bill | 04/30/2019 | inv00006 | Hi Tower Imagery | Drone footage of flood prevention system | 300.00 | | (1,973.91) |
| Bill | 04/30/2019 | 2 | Hi Tower Imagery | Pictures & video of levee from the effects of winter flooding | 150.00 | | (2,123.91) |
| Bill | 07/31/2019 | 6 | WSB (City Engineer) | 2019 Flood | 166.00 | | (2,289.91) |
| Total 7836 · Flood & Storm Wtr Exp - Gen'l | | | | | 2,289.91 | 0.00 | (2,289.91) |
| Total 7800 · Flood, Storm Wtr & Snow Ice | | | | | 2,289.91 | 0.00 | (2,289.91) |
| **TOTAL** | | | | | **18,343.72** | **32,349.75** | **14,006.03** |

# City of Afton
## #560 Other Special Activities Fund - Detail by Account
### January through July 2019

| Type | Date | Num | Source Name | Memo | Debit | Credit | Balance |
|---|---|---|---|---|---|---|---|
| **4815 · Cable Comm Dist - Year End** | | | | | | | |
| Depo... | 04/17/2019 | 2036 | | Cable Commission: 2018 Year End DIstribution | | 11,561.00 | 11,561.00 |
| Total 4815 · Cable Comm Dist - Year End | | | | | 0.00 | 11,561.00 | 11,561.00 |
| **4920 · Special Act Other - Interest** | | | | | | | |
| Gene... | 05/31/2019 | Interest | | Interest Income | | 5.64 | 5.64 |
| Gene... | 06/30/2019 | Interest | | Interest Income | | 17.14 | 22.78 |
| Gene... | 07/31/2019 | Interest | | Interest Income | | 16.60 | 39.38 |
| Total 4920 · Special Act Other - Interest | | | | | 0.00 | 39.38 | 39.38 |
| **4940 · State Fire Aid Received** | | | | | | | |
| Depo... | 03/14/2019 | 6708773 | | St of MN: Firefighters Relief Assoc 2019 | | 1,000.00 | 1,000.00 |
| Total 4940 · State Fire Aid Received | | | | | 0.00 | 1,000.00 | 1,000.00 |
| **5440 · State Fire Aid Paid** | | | | | | | |
| Bill | 03/31/2019 | StateFireAid219SBR | LSCV Fire Relief Assn (State Aid) | 2019 State Fire Aid Supplemental | 1,000.00 | | (1,000.00) |
| Total 5440 · State Fire Aid Paid | | | | | 1,000.00 | 0.00 | (1,000.00) |
| **5561 · Communications** | | | | | | | |
| Bill | 03/31/2019 | 45370 | Cities Digital | Laserfiche Avante software | 1,474.75 | | (1,474.75) |
| Bill | 05/29/2019 | AV Stack Parts | Stan Ross {DD} Reimb Exp | Parts to rebuild AV Stack | 139.69 | | (1,614.44) |
| Bill | 05/31/2019 | Banners 4/28/19 | Natural Imagery | Banners (2 Seasons) Project Fee (ordered by Stan Ross) | 500.00 | | (2,114.44) |
| Bill | 07/17/2019 | 45754 | Z Systems | New Council Chambers Equipment: Cameras, Workstation, Installation, Cables, Mounting Equip | 6,889.92 | | (9,004.36) |
| Total 5561 · Communications | | | | | 9,004.36 | 0.00 | (9,004.36) |
| **TOTAL** | | | | | **10,004.36** | **12,600.38** | **2,596.02** |

# City of Afton
## #115 Bldg & Land Fund - Detail by Account
### January through July 2019

| Type | Date | Num | Source Name | Memo | Debit | Credit | Balance |
|---|---|---|---|---|---|---|---|
| **4012 · Bldg & Land Curr Tax Levy** | | | | | | | |
| Depo... | 06/30/2019 | | | Bldg & Land Capital | | 3,000.00 | 3,000.00 |
| Total 4012 · Bldg & Land Curr Tax Levy | | | | | 0.00 | 3,000.00 | 3,000.00 |
| **4906 · Bldg & Land Interest Earnings** | | | | | | | |
| Gene... | 01/31/2019 | interest | | Interest Income | | 20.25 | 20.25 |
| Gene... | 02/28/2019 | interest | | Interest Income | | 18.30 | 38.55 |
| Gene... | 03/31/2019 | interest | | Interest Income | | 20.04 | 58.59 |
| Gene... | 04/30/2019 | interest | | Interest Income | | 19.42 | 78.01 |
| Gene... | 05/31/2019 | interest | | Interest Income | | 19.83 | 97.84 |
| Gene... | 06/30/2019 | interest | | Interest Income | | 18.90 | 116.74 |
| Gene... | 07/31/2019 | interest | | Interest Income | | 19.30 | 136.04 |
| Total 4906 · Bldg & Land Interest Earnings | | | | | 0.00 | 136.04 | 136.04 |
| **6004 · Bldg Repair & Maintenance** | | | | | | | |
| Bill | 05/31/2019 | 6524 | Ray Anderson & Sons | Dumpster 1675 Stage Coach Trl (old garage) | 150.00 | | (150.00) |
| Bill | 05/31/2019 | 6525 | Ray Anderson & Sons | Dumpster 1675 Stage Coach Trl (old garage) | 150.00 | | (300.00) |
| Total 6004 · Bldg Repair & Maintenance | | | | | 300.00 | 0.00 | (300.00) |
| **TOTAL** | | | | | **300.00** | **3,136.04** | **2,836.04** |



H1

# City of Afton
# 410 Sanitary Sewer Utility Operations - LTD Summary
## January 2014 through July 2019

| | Jan - Dec 14 | Jan - Dec 15 | Jan - Dec 16 | Jan - Dec 17 | Jan - Dec 18 | Jan - Jul 19 | TOTAL |
|---|---|---|---|---|---|---|---|
| **410 Sanitary Sewer Utility** | | | | | | | |
| **A. Rev** | | | | | | | |
| **4022 Sanitary Sewer - Levy** | 15,000.00 | 15,000.00 | 15,000.00 | 15,000.00 | 15,000.00 | 7,500.00 | 82,500.00 |
| **4023 Sanitary Sewer Oper - Fees** | 0.00 | 0.00 | 0.00 | 0.00 | 29,850.00 | 25,050.00 | 54,900.00 |
| **4919 Sanitary Sewer Interest** | 0.00 | 0.00 | 0.00 | 0.00 | 12.88 | 621.57 | 634.45 |
| **Total A. Rev** | 15,000.00 | 15,000.00 | 15,000.00 | 15,000.00 | 44,862.88 | 33,171.57 | 138,034.45 |
| **B. Exp** | | | | | | | |
| **6060 Sanitary Sewer Oper - Exp** | | | | | | | |
| **6062 Oth Contract Services** | 0.00 | 0.00 | 0.00 | 0.00 | (781.75) | (571.50) | (1,353.25) |
| **6065 Oper & Mgmt Fees** | 0.00 | 0.00 | 0.00 | (1,508.33) | (20,508.65) | (11,594.62) | (33,611.60) |
| **6066 Lab Fees** | 0.00 | 0.00 | 0.00 | 0.00 | (10,582.28) | (5,420.25) | (16,002.53) |
| **6068 Electric - Lift Stations** | 0.00 | 0.00 | 0.00 | 0.00 | (15,004.05) | (11,981.02) | (26,985.07) |
| **6069 Insurance - Sanitary Sewer** | 0.00 | 0.00 | 0.00 | 0.00 | 0.00 | (5,291.00) | (5,291.00) |
| **6060 Sanitary Sewer Oper - Exp - Other** | 0.00 | 0.00 | 0.00 | (745.19) | 0.00 | 0.00 | (745.19) |
| **Total 6060 Sanitary Sewer Oper - Exp** | 0.00 | 0.00 | 0.00 | (2,253.52) | (46,876.73) | (34,858.39) | (83,988.64) |
| **6083 Sanitary Sewer Spec Assessments** | 0.00 | 0.00 | 0.00 | 0.00 | (2,589.77) | (2,155.93) | (4,745.70) |
| **Total B. Exp** | 0.00 | 0.00 | 0.00 | (2,253.52) | (49,466.50) | (37,014.32) | (88,734.34) |
| **Total 410 Sanitary Sewer Utility** | 15,000.00 | 15,000.00 | 15,000.00 | 12,746.48 | (4,603.62) | (3,842.75) | 49,300.11 |
| **TOTAL** | **15,000.00** | **15,000.00** | **15,000.00** | **12,746.48** | **(4,603.62)** | **(3,842.75)** | **49,300.11** |

# City of Afton
## 410 Sanitary Sewer Fund - Detail by Account
### January through July 2019

| Type | Date | Num | Source Name | Memo | Debit | Credit | Balance |
|---|---|---|---|---|---|---|---|
| **4022 · Levy Sanitary Sewer Oper** | | | | | | | |
| Depo... | 06/30/2019 | | | Septic System City Bldg | | 7,500.00 | 7,500.00 |
| Total 4022 · Levy Sanitary Sewer Oper | | | | | 0.00 | 7,500.00 | 7,500.00 |
| **4023 · Fees Sanitary Sewer Oper** | | | | | | | |
| Depo... | 01/22/2019 | 44198 | | Afton St Croix | | 1,750.00 | 1,750.00 |
| Depo... | 01/22/2019 | 995122 | | John Thompson and Diane Benike | | 50.00 | 1,800.00 |
| Depo... | 01/22/2019 | 18299 | | Roger Larson | | 250.00 | 2,050.00 |
| Depo... | 01/22/2019 | 5600 | | Scott Anderson | | 50.00 | 2,100.00 |
| Depo... | 01/22/2019 | 2690 | | Elaine Mucciacciaro | | 150.00 | 2,250.00 |
| Depo... | 01/22/2019 | 5659 | | Jessica Mulle | | 100.00 | 2,350.00 |
| Depo... | 01/22/2019 | 1347 | | Lone Star on St Croix LLC | | 200.00 | 2,550.00 |
| Depo... | 01/22/2019 | 5448 | | Calla Lili: David and Kathleen Feehan-Schmidt | | 250.00 | 2,800.00 |
| Depo... | 01/22/2019 | 2654 | | Elaine Mucciacciaro | | 50.00 | 2,850.00 |
| Depo... | 02/28/2019 | 10411 | | George and Kathine Weed | | 600.00 | 3,450.00 |
| Depo... | 02/28/2019 | 5604 | | Scott Anderson | | 50.00 | 3,500.00 |
| Depo... | 02/28/2019 | 6596 | | Bill Palmquist | | 50.00 | 3,550.00 |
| Depo... | 02/28/2019 | 5673 | | Jessica Mulle | | 100.00 | 3,650.00 |
| Depo... | 02/28/2019 | 995123 | | John Thompson and Diane Benike | | 50.00 | 3,700.00 |
| Depo... | 02/28/2019 | 5602 | | Scott Anderson | | 50.00 | 3,750.00 |
| Depo... | 02/28/2019 | 6590 | | Bill Palmquist | | 50.00 | 3,800.00 |
| Depo... | 02/28/2019 | 3731 | | Paul Nickerson | | 600.00 | 4,400.00 |
| Depo... | 02/28/2019 | 5452 | | Kathleen and David Feehan-Schmidt | | 250.00 | 4,650.00 |
| Depo... | 02/28/2019 | 44225 | | Afton St Croix | | 1,750.00 | 6,400.00 |
| Depo... | 02/28/2019 | 1352 | | Lone Star on St Croix | | 200.00 | 6,600.00 |
| Depo... | 02/28/2019 | 18302 | | Roger Larson | | 50.00 | 6,650.00 |
| Depo... | 02/28/2019 | 1356 | | Lone Star on St Croix | | 200.00 | 6,850.00 |
| Depo... | 02/28/2019 | 5456 | | Kathleen and David Feehan-Schmidt | | 250.00 | 7,100.00 |
| Depo... | 02/28/2019 | 18306 | | Roger Larson | | 50.00 | 7,150.00 |
| Depo... | 03/25/2019 | 5639 | | Jessica Mulle | | 100.00 | 7,250.00 |
| Depo... | 03/25/2019 | 6601 | | Bill Palmquist | | 50.00 | 7,300.00 |
| Depo... | 03/25/2019 | 2695 | | Elaine Mucciacciaro | | 100.00 | 7,400.00 |
| Depo... | 03/25/2019 | 5461 | | Kathleen and David Feehan Schmidt | | 250.00 | 7,650.00 |
| Depo... | 03/25/2019 | 6158 | | Kevin Shosten | | 50.00 | 7,700.00 |
| Depo... | 03/25/2019 | 44266 | | Afton St Croix | | 1,750.00 | 9,450.00 |
| Depo... | 03/25/2019 | 995124 | | John Thompson and Diane Benike | | 50.00 | 9,500.00 |
| Depo... | 03/25/2019 | 3609 | | Thorn Butler | | 100.00 | 9,600.00 |
| Depo... | 03/25/2019 | 5605 | | Scott Anderson | | 50.00 | 9,650.00 |
| Depo... | 04/17/2019 | 3548 | | Paul and Rebecca Nickerson | | 900.00 | 10,550.00 |
| Depo... | 04/17/2019 | 995126 | | John Thompson and Diane Benike | | 50.00 | 10,600.00 |
| Depo... | 04/17/2019 | 3614 | | Thorn Butler | | 100.00 | 10,700.00 |
| Depo... | 04/17/2019 | 6604 | | Bill Palmquist | | 50.00 | 10,750.00 |
| Depo... | 04/17/2019 | 44337 | | Afton St Croix | | 1,750.00 | 12,500.00 |
| Depo... | 04/17/2019 | 5622 | | Scott Anderson | | 50.00 | 12,550.00 |
| Depo... | 04/17/2019 | 18309 | | Roger Larson | | 50.00 | 12,600.00 |
| Depo... | 04/17/2019 | 1360 | | Lone Star on St Croix | | 200.00 | 12,800.00 |
| Gene... | 04/22/2019 | Petty Cash | | Petty Cash Activity 01/16/19 thru 04/22/19 | | 350.00 | 13,150.00 |
| Depo... | 04/23/2019 | 5466 | | Kathleen and David Feehan-Schmidt | | 250.00 | 13,400.00 |
| Depo... | 04/30/2019 | 44387 | | Afton St Croix Co | | 1,750.00 | 15,150.00 |
| Depo... | 04/30/2019 | 18314 | | Roger Larson | | 50.00 | 15,200.00 |
| Depo... | 04/30/2019 | 5651 | | Jessica Mulle | | 100.00 | 15,300.00 |
| Depo... | 04/30/2019 | 1363 | | Lone Star on St Croix | | 200.00 | 15,500.00 |
| Depo... | 04/30/2019 | 2699 | | Elaine Mucciacciaro | | 50.00 | 15,550.00 |
| Depo... | 05/28/2019 | 1365 | | Lone Star on St Croix | | 200.00 | 15,750.00 |
| Depo... | 05/28/2019 | 11879 | | Louis and Linda Tilton | | 35.00 | 15,785.00 |
| Depo... | 05/28/2019 | 12130 | | Hubert and Helen Schneider | | 35.00 | 15,820.00 |
| Depo... | 05/28/2019 | 995128 | | John Thompson and Diane Benike | | 50.00 | 15,870.00 |
| Depo... | 05/28/2019 | 6615 | | Bill Palmquist | | 50.00 | 15,920.00 |
| Depo... | 05/28/2019 | 13809 | | Donald and Vicki Bulger | | 35.00 | 15,955.00 |
| Depo... | 05/28/2019 | 2100 | | Kristin Durkopp | | 35.00 | 15,990.00 |
| Depo... | 05/28/2019 | 2704 | | Elaine Mucciacciaro | | 50.00 | 16,040.00 |
| Depo... | 05/28/2019 | 5618 | | Mary McLarin and Julie Marcus | | 35.00 | 16,075.00 |
| Depo... | 05/28/2019 | 5188 | | Ronald Raedeke and Susan Loomis | | 35.00 | 16,110.00 |
| Depo... | 06/17/2019 | 6712 | | Thomas and Kathryn Gasser | | 35.00 | 16,145.00 |

# City of Afton
## 410 Sanitary Sewer Fund - Detail by Account
### January through July 2019

| Type | Date | Num | Source Name | Memo | Debit | Credit | Balance |
|---|---|---|---|---|---|---|---|
| Depo... | 06/17/2019 | 5475 | | Kathleen and David Feehan-Schmidt | | 250.00 | 16,395.00 |
| Depo... | 06/17/2019 | 10328 | | Matt and Kristy Cooper | | 35.00 | 16,430.00 |
| Depo... | 06/17/2019 | 2110 | | Kristin Durkopp | | 35.00 | 16,465.00 |
| Depo... | 06/17/2019 | 2708 | | Elaine Mucciaacciaro | | 150.00 | 16,615.00 |
| Depo... | 06/17/2019 | 995129 | | John Thompson and Diane Beniki | | 50.00 | 16,665.00 |
| Depo... | 06/17/2019 | 5150 | | Brad and Michelle Holz | | 35.00 | 16,700.00 |
| Depo... | 06/17/2019 | 3496 | | Paul and Rebecca Nickerson | | 600.00 | 17,300.00 |
| Depo... | 06/17/2019 | 6624 | | Bill Palmquist | | 50.00 | 17,350.00 |
| Depo... | 06/17/2019 | 1115 | | Kevin and Kirsten Langstraat | | 70.00 | 17,420.00 |
| Depo... | 06/17/2019 | 12134 | | Hubert and Helen Schneider | | 35.00 | 17,455.00 |
| Depo... | 06/17/2019 | 5624 | | Mary McLaurin and Julie Marcus | | 35.00 | 17,490.00 |
| Depo... | 06/17/2019 | 3052 | | Marcia Dahleen | | 150.00 | 17,640.00 |
| Depo... | 06/17/2019 | 5609 | | Scott Anderson | | 50.00 | 17,690.00 |
| Depo... | 06/17/2019 | 5473 | | Kathleen and David Feehan-Schmidt | | 250.00 | 17,940.00 |
| Depo... | 06/17/2019 | 5615 | | Jessica Mulle | | 100.00 | 18,040.00 |
| Depo... | 06/17/2019 | 5146 | | Brad and Michelle Holz | | 35.00 | 18,075.00 |
| Depo... | 06/17/2019 | 10321 | | Matt and Kristy Cooper | | 35.00 | 18,110.00 |
| Depo... | 06/17/2019 | 44440 | | Afton St Croix Co | | 1,750.00 | 19,860.00 |
| Depo... | 06/17/2019 | 18318 | | Roger Larson | | 50.00 | 19,910.00 |
| Depo... | 07/02/2019 | 44516 | | Afton St Croix | | 1,750.00 | 21,660.00 |
| Depo... | 07/02/2019 | 5618 | | Jessica Mulle | | 100.00 | 21,760.00 |
| Depo... | 07/02/2019 | 5198 | | Ronald Raedeke and Susan Loomis | | 35.00 | 21,795.00 |
| Depo... | 07/02/2019 | 13863 | | Donald and Vicki Bulger | | 35.00 | 21,830.00 |
| Depo... | 07/09/2019 | 1368 | | Lone Star on St Croix | | 200.00 | 22,030.00 |
| Depo... | 07/09/2019 | 13895 | | Donald and Vicki Bulger | | 35.00 | 22,065.00 |
| Depo... | 07/09/2019 | 6634 | | Bill Palmquist | | 50.00 | 22,115.00 |
| Depo... | 07/09/2019 | 5625 | | Mary McLaurin and Julie Marcus | | 35.00 | 22,150.00 |
| Depo... | 07/09/2019 | 1121 | | Kevin and Kirsten Langstraat | | 35.00 | 22,185.00 |
| Depo... | 07/09/2019 | 3616 | | Thorn Butler | | 100.00 | 22,285.00 |
| Depo... | 07/09/2019 | 10306 | | Matt and Kristy Cooper | | 35.00 | 22,320.00 |
| Depo... | 07/31/2019 | 18322 | | Roger Larsen | | 50.00 | 22,370.00 |
| Depo... | 07/31/2019 | 2123 | | Kristin Durkopp | | 35.00 | 22,405.00 |
| Depo... | 07/31/2019 | 12139 | | Hubert and Helen Schneider | | 35.00 | 22,440.00 |
| Depo... | 07/31/2019 | 995130 | | John Thompson and Diane Benike | | 50.00 | 22,490.00 |
| Depo... | 07/31/2019 | 3503 | | Paul and Rebecca Nickerson | | 300.00 | 22,790.00 |
| Depo... | 07/31/2019 | 1373 | | Lone Star on the St Croix | | 200.00 | 22,990.00 |
| Depo... | 07/31/2019 | 5612 | | Scott Anderson | | 100.00 | 23,090.00 |
| Depo... | 07/31/2019 | 44583 | | Afton St Croix | | 1,750.00 | 24,840.00 |
| Depo... | 07/31/2019 | 11891 | | Louis and Linda Tilton | | 140.00 | 24,980.00 |
| Depo... | 07/31/2019 | 6732 | | Thomas and Kathryn Gasser | | 35.00 | 25,015.00 |
| Depo... | 07/31/2019 | 6728 | | Thomas and Kathryn Gasser | | 35.00 | 25,050.00 |
| Total 4023 · Fees Sanitary Sewer Oper | | | | | 0.00 | 25,050.00 | 25,050.00 |
| **4919 · Sanitary Sewer - Interest** | | | | | | | |
| Gene... | 01/31/2019 | Interest | | Interest Income | | 99.12 | 99.12 |
| Gene... | 02/28/2019 | Interest | | Interest Income | | 88.65 | 187.77 |
| Gene... | 03/31/2019 | Interest | | Interest Income | | 97.24 | 285.01 |
| Gene... | 04/30/2019 | Interest | | Interest Income | | 92.16 | 377.17 |
| Gene... | 05/31/2019 | Interest | | Interest Income | | 89.58 | 466.75 |
| Gene... | 06/30/2019 | Interest | | Interest Income | | 81.91 | 548.66 |
| Gene... | 07/31/2019 | Interest | | Interest Income | | 72.91 | 621.57 |
| Total 4919 · Sanitary Sewer - Interest | | | | | 0.00 | 621.57 | 621.57 |
| **6060 · Sanitary Sewer Expenses** | | | | | | | |
| **6062 · Other Contract Services** | | | | | | | |
| Bill | 03/31/2019 | 6062 | Get Connected Tech | Quarterly Monitoring of Afton Sewage Site, 1st qtr 2019: 3 months @ $65 | 195.00 | | (195.00) |
| Bill | 06/26/2019 | 151080 | Get Connected Tech | Quarterly Monitoring of Afton Sewage Site, 2nd qtr 2019: 3 months @ $65 | 195.00 | | (390.00) |
| Bill | 06/30/2019 | 102461 | Petersen Mgmt (Lab Fees) | service call re generator | 181.50 | | (571.50) |
| Total 6062 · Other Contract Services | | | | | 571.50 | 0.00 | (571.50) |
| **6065 · Oper & Mgmt Fees** | | | | | | | |
| Bill | 01/31/2019 | 100019 | Petersen Mgmt (Oper & Mgmt Fees) | Operations and management fees Jan2019 | 1,508.33 | | (1,508.33) |
| Bill | 02/28/2019 | 100464 | Petersen Mgmt (Oper & Mgmt Fees) | Operations and management fees Feb2019 | 1,508.33 | | (3,016.66) |

I3

# City of Afton
## 410 Sanitary Sewer Fund - Detail by Account
### January through July 2019

| Type | Date | Num | Source Name | Memo | Debit | Credit | Balance |
|---|---|---|---|---|---|---|---|
| Bill | 02/28/2019 | 100678 | Petersen Mgmt (Lab Fees) | 2/13/19 service work on generator | 608.81 | | (3,625.47) |
| Bill | 03/31/2019 | 100849 | Petersen Mgmt (Oper & Mgmt Fees) | Operations and management fees Mar2019 | 1,508.33 | | (5,133.80) |
| Bill | 04/30/2019 | 101379 | Petersen Mgmt (Oper & Mgmt Fees) | Operations and management fees Apr2019 | 1,508.33 | | (6,642.13) |
| Bill | 05/21/2019 | 101703 | Petersen Mgmt (Oper & Mgmt Fees) | Operations and management fees Apr2019 | 1,508.33 | | (8,150.46) |
| Bill | 06/26/2019 | 102145 | Petersen Mgmt (Oper & Mgmt Fees) | Operations and management fees Jun2019 | 1,508.33 | | (9,658.79) |
| Bill | 06/30/2019 | 102469 | Petersen Mgmt (Oper & Mgmt Fees) | Operations and management fees Jun2019 tech service 6/11/19 | 427.50 | | (10,086.29) |
| Bill | 07/31/2019 | 102689 | Petersen Mgmt (Oper & Mgmt Fees) | Operations and management fees Jul2019 | 1,508.33 | | (11,594.62) |
| Total 6065 · Oper & Mgmt Fees | | | | | 11,594.62 | 0.00 | (11,594.62) |
| **6066 · Lab Fees** | | | | | | | |
| Bill | 02/28/2019 | 100485 | Petersen Mgmt (Lab Fees) | Lab Fees 1/9/19 | 295.35 | | (295.35) |
| Bill | 02/28/2019 | 100308 | Petersen Mgmt (Lab Fees) | Lab Fees 1/16/19 and 1/24/19 | 503.80 | | (799.15) |
| Bill | 02/28/2019 | 100678 | Petersen Mgmt (Lab Fees) | Lab Fees 1/31/19 | 227.70 | | (1,026.85) |
| Bill | 02/28/2019 | 100678 | Petersen Mgmt (Lab Fees) | Lab Fees 2/13/19 | 391.05 | | (1,417.90) |
| Bill | 03/31/2019 | 100846 | Petersen Mgmt (Lab Fees) | Lab Fees 2/7/19 | 64.35 | | (1,482.25) |
| Bill | 03/31/2019 | 100846 | Petersen Mgmt (Lab Fees) | Lab Fees 3/4/19 | 282.70 | | (1,764.95) |
| Bill | 03/31/2019 | 101038 | Petersen Mgmt (Lab Fees) | Lab Fees 3/13/19 | 260.70 | | (2,025.65) |
| Bill | 04/17/2019 | 101082 | Petersen Mgmt (Lab Fees) | Lab Fees 3/21/19 | 341.55 | | (2,367.20) |
| Bill | 04/30/2019 | 101377 | Petersen Mgmt (Lab Fees) | Chemical refill 4/4/19 | 1,631.85 | | (3,999.05) |
| Bill | 05/31/2019 | 102037 | Petersen Mgmt (Lab Fees) | Lab fees 5/21/19 | 255.20 | | (4,254.25) |
| Bill | 06/30/2019 | 102461 | Petersen Mgmt (Lab Fees) | Lab fees 6/5/19 | 233.20 | | (4,487.45) |
| Bill | 06/30/2019 | 102461 | Petersen Mgmt (Lab Fees) | Lab fees 6/19/19 | 233.20 | | (4,720.65) |
| Bill | 07/31/2019 | 102682 | Petersen Mgmt (Lab Fees) | Lab fees | 466.40 | | (5,187.05) |
| Bill | 07/31/2019 | 102967 | Petersen Mgmt (Lab Fees) | Lab fees | 233.20 | | (5,420.25) |
| Total 6066 · Lab Fees | | | | | 5,420.25 | 0.00 | (5,420.25) |
| **6068 · Electricity - Lift Stations** | | | | | | | |
| Bill | 01/31/2019 | 013119 | Xcel Energy {EFT} (51-11957 8190) | Acct No. 51-00119578190 : Lift Station 15995 UPPER 34TH ST S. Meter 21647908 Premises 304699630 | 586.77 | | (586.77) |
| Bill | 01/31/2019 | 013119 | Xcel Energy {EFT} (51-11983 9027) | Acct No. 51-0011983902-7 Pumphouse for Water Treatment: 2318 St Croix Trl S. Meter 15491212 Pre... | 1,250.72 | | (1,837.49) |
| Bill | 02/28/2019 | 022819 | Xcel Energy {EFT} (51-11957 8190) | Acct No. 51-00119578190 : Lift Station 15995 UPPER 34TH ST S. Meter 21647908 Premises 304699630 | 635.95 | | (2,473.44) |
| Bill | 03/31/2019 | 033119 | Xcel Energy {EFT} (51-11983 9027) | Acct No. 51-0011983902-7 Pumphouse for Water Treatment: 2318 St Croix Trl S. Meter 15491212 Pre... | 1,016.65 | | (3,490.09) |
| Bill | 03/31/2019 | 033119 | Xcel Energy {EFT} (51-11957 8190) | Acct No. 51-00119578190 : Lift Station 15995 UPPER 34TH ST S. Meter 21647908 Premises 304699630 | 571.49 | | (4,061.58) |
| Bill | 04/30/2019 | 043019 | Xcel Energy {EFT} (51-11983 9027) | Acct No. 51-0011983902-7 Pumphouse for Water Treatment: 2318 St Croix Trl S. Meter 15491212 Pre... | 1,002.48 | | (5,064.06) |
| Bill | 04/30/2019 | 043019 | Xcel Energy {EFT} (51-11957 8190) | Acct No. 51-00119578190 : Lift Station 15995 UPPER 34TH ST S. Meter 21647908 Premises 304699630 | 622.20 | | (5,686.26) |
| Bill | 04/30/2019 | 043019a | Xcel Energy {EFT} (51-11983 9027) | Acct No. 51-0011983902-7 Pumphouse for Water Treatment: 2318 St Croix Trl S. Meter 15491212 Pre... | 993.90 | | (6,680.16) |
| Bill | 05/31/2019 | 053119 | Xcel Energy {EFT} (51-11957 8190) | Acct No. 51-00119578190 : Lift Station 15995 UPPER 34TH ST S. Meter 21647908 Premises 304699630 | 1,032.19 | | (7,712.35) |
| Bill | 05/31/2019 | 053119 | Xcel Energy {EFT} (51-11983 9027) | Acct No. 51-0011983902-7 Pumphouse for Water Treatment: 2318 St Croix Trl S. Meter 15491212 Pre... | 1,101.64 | | (8,813.99) |
| Bill | 06/30/2019 | 063019 | Xcel Energy {EFT} (51-11957 8190) | Acct No. 51-00119578190 : Lift Station 15995 UPPER 34TH ST S. Meter 21647908 Premises 304699630 | 945.17 | | (9,759.16) |
| Bill | 07/31/2019 | 073119 | Xcel Energy {EFT} (51-11983 9027) | Acct No. 51-0011983902-7 Pumphouse for Water Treatment: 2318 St Croix Trl S. Meter 15491212 Pre... | 410.62 | | (10,169.78) |
| Bill | 07/31/2019 | 073119 | Xcel Energy {EFT} (51-11957 8190) | Acct No. 51-00119578190 : Lift Station 15995 UPPER 34TH ST S. Meter 21647908 Premises 304699630 | 958.73 | | (11,128.51) |
| Bill | 07/31/2019 | 073119 | Xcel Energy {EFT} (51-11983 9027) | Acct No. 51-0011983902-7 Pumphouse for Water Treatment: 2318 St Croix Trl S. Meter 15491212 Pre... | 852.51 | | (11,981.02) |
| Total 6068 · Electricity - Lift Stations | | | | | 11,981.02 | 0.00 | (11,981.02) |
| **6069 · Insurance - Sanitary Sewer** | | | | | | | |
| Bill | 05/31/2019 | 051519 0515... | LMCIT (Ins) | Sanitary Sewer Property 5/15/19 to 5/15/20 | 5,291.00 | | (5,291.00) |
| Bill | 06/26/2019 | MEL 051519... | LMCIT (Ins) | MEL Ins 5/15/19 to 5/15/20 | 909.00 | | (6,200.00) |
| Depo... | 07/09/2019 | 23305 | | LMCIT Refund (ins pd twice) | | 909.00 | (5,291.00) |
| Total 6069 · Insurance - Sanitary Sewer | | | | | 6,200.00 | 909.00 | (5,291.00) |
| Total 6060 · Sanitary Sewer Expenses | | | | | 35,767.39 | 909.00 | (34,858.39) |
| **6083 · Sanitary Sewer Spec Assessments** | | | | | | | |
| Bill | 03/31/2019 | CityHall2019... | Wash Cty (Prop Records & Taxpayer Serv) | Full Year 2019 Special Assessment 3033 St Croix Trl S City Hall 22.028.20.11.0017 | 840.20 | | (840.20) |
| Bill | 03/31/2019 | HistSociety2... | Wash Cty (Prop Records & Taxpayer Serv) | Full Year 2019 Special Assessment Historical Society 22.028.20.11.0004 | 1,068.73 | | (1,908.93) |
| Bill | 04/30/2019 | 156537 | Wash Cty (Assessment & Taxation) | 2019 Special Assessment billing | 247.00 | | (2,155.93) |
| Total 6083 · Sanitary Sewer Spec Assessments | | | | | 2,155.93 | 0.00 | (2,155.93) |
| **TOTAL** | | | | | **37,923.32** | **34,080.57** | **(3,842.75)** |

I4

# City of Afton
## #120 Street Improvement Fund - Detail by Account
### January through July 2019

| Type | Date | Num | Source Name | Memo | Debit | Credit | Balance |
|---|---|---|---|---|---|---|---|
| **4013 · Current Tax Levy - Street Imp** | | | | | | | |
| Deposit | 06/30/2019 | | | Street Imp | | 60,250.00 | 60,250.00 |
| Total 4013 · Current Tax Levy - Street Imp | | | | | 0.00 | 60,250.00 | 60,250.00 |
| **4907 · Pub Wks 4M Fd Interest Earnings** | | | | | | | |
| General Jo... | 01/31/2019 | Interest | | Interest Income | | 580.62 | 580.62 |
| General Jo... | 02/28/2019 | Interest | | Interest Income | | 751.27 | 1,331.89 |
| General Jo... | 03/31/2019 | Interest | | Interest Income | | 962.61 | 2,294.50 |
| General Jo... | 04/30/2019 | Interest | | Interest Income | | 1,389.15 | 3,683.65 |
| General Jo... | 05/31/2019 | Interest | | Interest Income | | 1,413.86 | 5,097.51 |
| General Jo... | 06/30/2019 | Interest | | Interest Income | | 1,354.80 | 6,452.31 |
| General Jo... | 07/31/2019 | Interest | | Interest Income | | 1,382.35 | 7,834.66 |
| Total 4907 · Pub Wks 4M Fd Interest Earnings | | | | | 0.00 | 7,834.66 | 7,834.66 |
| **7900 · Street Imp Capital Projects** | | | | | | | |
| **7938 · Culvert Repair & Replacement** | | | | | | | |
| Bill | 05/31/2019 | 4 April 2019 | WSB (City Engineer) | Culverts | 249.00 | | (249.00) |
| Total 7938 · Culvert Repair & Replacement | | | | | 249.00 | 0.00 | (249.00) |
| **7984 · River Road Sanitary Options** | | | | | | | |
| Bill | 02/28/2019 | 1 | WSB (City Engineer) | River Road Sanitary Sewer | 581.00 | | (581.00) |
| Bill | 03/31/2019 | 2 | WSB (City Engineer) | River Road Sanitary Sewer | 1,659.50 | | (2,240.50) |
| Bill | 05/31/2019 | 4 April 2019 | WSB (City Engineer) | River Road Sanitary Sewer | 332.00 | | (2,572.50) |
| Bill | 05/31/2019 | 1 April 2019 | WSB (River Road Sanitary Sewer) | River Road Sanitary Sewer Improvements | 1,027.00 | | (3,599.50) |
| Bill | 06/30/2019 | 2 | WSB (River Road Sanitary Sewer) | River Road Sanitary Sewer Improvements | 8,958.00 | | (12,557.50) |
| Bill | 07/31/2019 | 744361244 | Finance and Commerce | River Road Sanitary Imp Project | 212.29 | | (12,769.79) |
| Bill | 07/31/2019 | 6 | WSB (City Engineer) | River Road Sanitary Sewer | 83.00 | | (12,852.79) |
| Bill | 07/31/2019 | 3 | WSB (River Road Sanitary Sewer) | River Road Sanitary Sewer Improvements | 8,647.75 | | (21,500.54) |
| Total 7984 · River Road Sanitary Options | | | | | 21,500.54 | 0.00 | (21,500.54) |
| Total 7900 · Street Imp Capital Projects | | | | | 21,749.54 | 0.00 | (21,749.54) |
| **TOTAL** | | | | | **21,749.54** | **68,084.66** | **46,335.12** |

JT

# City of Afton
## K. #122 Bridge Replacement Fund - Detail by Account
### January through July 2019

| Type | Date | Num | Source Name | Memo | Debit | Credit | Balance |
|---|---|---|---|---|---|---|---|
| **4017 · Tax Levy - Bridge Replacement** | | | | | | | |
| Deposit | 06/30/2019 | | | Bridge Replacement | | 25,000.00 | 25,000.00 |
| Total 4017 · Tax Levy - Bridge Replacement | | | | | 0.00 | 25,000.00 | 25,000.00 |
| **4918 · Bridge Replacement - Interest** | | | | | | | |
| General Jo... | 01/31/2019 | Interest | | Interest Income | | 74.50 | 74.50 |
| General Jo... | 02/28/2019 | Interest | | Interest Income | | 67.41 | 141.91 |
| General Jo... | 03/31/2019 | Interest | | Interest Income | | 73.95 | 215.86 |
| General Jo... | 04/30/2019 | Interest | | Interest Income | | 71.03 | 286.89 |
| General Jo... | 05/31/2019 | Interest | | Interest Income | | 71.10 | 357.99 |
| General Jo... | 06/30/2019 | Interest | | Interest Income | | 68.16 | 426.15 |
| General Jo... | 07/31/2019 | Interest | | Interest Income | | 73.53 | 499.68 |
| Total 4918 · Bridge Replacement - Interest | | | | | 0.00 | 499.68 | 499.68 |
| **7770 · Bridge Replacement Expense** | | | | | | | |
| **7771 · Bridge Replacement - Engineer** | | | | | | | |
| Bill | 03/31/2019 | 2 | WSB (Bridge Inspections) | Bridge Safety Inspections | 1,050.00 | | (1,050.00) |
| Bill | 05/31/2019 | 4 April 2019 | WSB (City Engineer) | Bridge | 124.50 | | (1,174.50) |
| Total 7771 · Bridge Replacement - Engineer | | | | | 1,174.50 | 0.00 | (1,174.50) |
| Total 7770 · Bridge Replacement Expense | | | | | 1,174.50 | 0.00 | (1,174.50) |
| **TOTAL** | | | | | **1,174.50** | **25,499.68** | **24,325.18** |

K1

# City of Afton
## 200 Park Reserve Fund Stmt of Rev & Exp - Detail
### January through July 2019

| Type | Date | Num | Source Name | Memo | Debit | Credit | Balance |
|---|---|---|---|---|---|---|---|
| **200 Park Reserve Fd** | | | | | | | |
| **A. Rev** | | | | | | | |
| **4425 Park Dedication Fees** | | | | | | | |
| Deposit | 04/17/2019 | 6467 | | Albert W Carlson Afton Creek Preserve Dev LLC: Park Dedication Fee | | 180,000.00 | 180,000.00 |
| Deposit | 07/31/2019 | 5390 1456 | | Kerry and Judy White: Park Dedication Fee Res 2019-29 | | 10,000.00 | 190,000.00 |
| Total 4425 Park Dedication Fees | | | | | 0.00 | 190,000.00 | 190,000.00 |
| **4903 Interest Income - 4M Fund** | | | | | | | |
| General Journal | 01/31/2019 | interest | | Interest Income | | 141.90 | 141.90 |
| General Journal | 02/28/2019 | interest | | Interest Income | | 129.88 | 271.78 |
| General Journal | 03/31/2019 | interest | | Interest Income | | 142.88 | 414.66 |
| General Journal | 04/30/2019 | interest | | Interest Income | | 138.49 | 553.15 |
| General Journal | 05/31/2019 | interest | | Interest Income | | 234.91 | 788.06 |
| General Journal | 06/30/2019 | interest | | Interest Income | | 456.39 | 1,244.45 |
| General Journal | 07/31/2019 | interest | | Interest Income | | 468.60 | 1,713.05 |
| Total 4903 Interest Income - 4M Fund | | | | | 0.00 | 1,713.05 | 1,713.05 |
| Total A. Rev | | | | | 0.00 | 191,713.05 | 191,713.05 |
| **B. Exp** | | | | | | | |
| **6115 Pub Wks - Park & Open Space** | | | | | | | |
| Bill | 07/31/2019 | 20190 | St Croix Recreation Fun Playgrounds Inc. | Estate old leg package wv10153 | 420.00 | | (420.00) |
| Bill | 07/31/2019 | f3839 | Flagship Recreation | Install playground equip at Town Square Park | 3,734.00 | | (4,154.00) |
| Bill | 07/31/2019 | inv 075618 | Landscape Structures | Playground equip for Town Square Park | 5,358.75 | | (9,512.75) |
| Bill | 07/31/2019 | f3855 | Flagship Recreation | Wood fiber for playground equip at Town Square Park | 500.00 | | (10,012.75) |
| Total 6115 Pub Wks - Park & Open Space | | | | | 10,012.75 | 0.00 | (10,012.75) |
| Total B. Exp | | | | | 10,012.75 | 0.00 | (10,012.75) |
| Total 200 Park Reserve Fd | | | | | 10,012.75 | 191,713.05 | 181,700.30 |
| **TOTAL** | | | | | **10,012.75** | **191,713.05** | **181,700.30** |

# City of Afton
## 805 City Infra-Structure Improvement Fund - LTD Summary
### April 2011 through July 2019

| | Apr - Dec 11 | Jan - Dec 12 | Jan - Dec 13 | Jan - Dec 14 | Jan - Dec 15 | Jan - Dec 16 | Jan - Dec 17 | Jan - Dec 18 | Jan - Jul 19 | TOTAL |
|---|---|---|---|---|---|---|---|---|---|---|
| **805 City InfraStructure Imp Fd** | | | | | | | | | | |
| **A. Rev** | | | | | | | | | | |
| **4917 Interest Income** | 0.00 | 2.04 | 2.55 | 3.26 | 395.48 | 4,602.22 | 3,305.81 | 1,820.97 | 9,699.39 | 19,831.72 |
| **4828 2015A Dwntwn Tmp Bond Proceeds** | 0.00 | 0.00 | 0.00 | 0.00 | 3,755,000.00 | 0.00 | 0.00 | 0.00 | 0.00 | 3,755,000.00 |
| **4829 2017A Dwntwn Tmp Bond Proceeds** | 0.00 | 0.00 | 0.00 | 0.00 | 0.00 | 0.00 | 1,980,000.00 | 0.00 | 0.00 | 1,980,000.00 |
| **4849 DNR BWSR Grant** | 0.00 | 0.00 | 129,850.00 | 0.00 | 0.00 | 0.00 | 0.00 | 84,710.07 | 0.00 | 214,560.07 |
| **4850 Park Reserve Trf re. Dwntwn Imp** | 0.00 | 0.00 | 100,000.00 | 0.00 | 0.00 | 0.00 | 0.00 | 0.00 | 0.00 | 100,000.00 |
| **4851 VBWD Easement** | 0.00 | 0.00 | 0.00 | 0.00 | 5,800.00 | 0.00 | 0.00 | 0.00 | 0.00 | 5,800.00 |
| **4852 VBWD Grant $50M/Yr 10 Yrs** | 0.00 | 0.00 | 0.00 | 0.00 | 0.00 | 50,000.00 | 50,000.00 | 100,000.00 | 0.00 | 200,000.00 |
| **4853 County Share Dwntwn/Septic Proj** | 0.00 | 0.00 | 0.00 | 0.00 | 0.00 | 0.00 | 4,092,588.89 | 33,609.96 | 21,365.98 | 4,147,564.83 |
| **4861 CWRF G 054 Grant Stormwater** | 0.00 | 0.00 | 0.00 | 0.00 | 0.00 | 0.00 | 349,938.00 | 0.00 | 0.00 | 349,938.00 |
| **4862 CWRF L 054 Ln Proceeds Stormwtr** | 0.00 | 0.00 | 0.00 | 0.00 | 0.00 | 0.00 | 656,371.52 | 233,935.55 | 18,144.87 | 908,451.94 |
| **4863 CWRF G 055 Grant Sanitary Sewer** | 0.00 | 0.00 | 0.00 | 0.00 | 0.00 | 0.00 | 398,320.00 | 0.00 | 0.00 | 398,320.00 |
| **4864 CWRF L 055 Ln Proceeds Sanitary Swr** | 0.00 | 0.00 | 0.00 | 0.00 | 0.00 | 0.00 | 1,001,173.03 | 150,278.31 | 10,947.42 | 1,162,398.76 |
| **4865 PSIG G 056 Sanitary Sewer** | 0.00 | 0.00 | 0.00 | 0.00 | 0.00 | 0.00 | 4,382,993.48 | 807,011.35 | 245,930.21 | 5,435,935.04 |
| **4871 Rental Inc - Flood Levee Prop** | 0.00 | 850.00 | 1,700.00 | 0.00 | 0.00 | 0.00 | 0.00 | 0.00 | 0.00 | 2,550.00 |
| **4894 MnDNR Grant - Other** | 0.00 | 9,247.38 | 10,024.53 | 0.00 | 35,137.00 | 0.00 | 1,611,106.29 | 499.81 | 1,280,016.00 | 2,946,031.01 |
| **4895 MnDNR Grant - Land Purchase** | 0.00 | 351,673.70 | 616,669.52 | 0.00 | 0.00 | 0.00 | 0.00 | 0.00 | 0.00 | 968,343.22 |
| **4896 Flood Levy Imp Proj - Tax Levy** | 0.00 | 95,000.00 | 95,000.00 | 95,000.00 | 95,000.00 | 95,000.00 | 95,000.00 | 95,000.00 | 47,500.00 | 712,500.00 |
| **Total A. Rev** | 0.00 | 456,773.12 | 953,246.60 | 95,003.26 | 3,891,332.48 | 149,602.22 | 14,620,797.02 | 1,506,866.02 | 1,633,603.87 | 23,307,224.59 |
| **B. Exp** | | | | | | | | | | |
| **7728 2015A Dwntwn Tmp Bond Principal** | 0.00 | 0.00 | 0.00 | 0.00 | 0.00 | 0.00 | (3,755,000.00) | 0.00 | 0.00 | (3,755,000.00) |
| **7738 2015A Dwntwn Tmp Imp Bond Issue Exp** | 0.00 | 0.00 | 0.00 | 0.00 | (53,263.75) | (1,608.00) | (575.00) | 0.00 | 0.00 | (55,446.75) |
| **7740 2017A Dwntwn Tmp Imp Bond Issue Exp** | 0.00 | 0.00 | 0.00 | 0.00 | 0.00 | 0.00 | (31,219.80) | 0.00 | 0.00 | (31,219.80) |
| **8871 Wetland Credits** | 0.00 | 0.00 | 0.00 | 0.00 | 0.00 | 0.00 | (51,747.88) | 0.00 | 0.00 | (51,747.88) |
| **8891 Dwntown Prop Purch/Exp** | 0.00 | (372,221.16) | (780,944.33) | (933.95) | (2,481.58) | (1,726.95) | (540.66) | (367.77) | (236.72) | (1,159,453.12) |
| **8892 Dwntown Imp - Easemnts & Damages** | 0.00 | 0.00 | 0.00 | (11,700.00) | (633,200.00) | (9,200.00) | (33,120.68) | 0.00 | (11,584.00) | (698,804.68) |
| **8893 Single Audit Expense** | 0.00 | 0.00 | 0.00 | 0.00 | 0.00 | 0.00 | 0.00 | (2,000.00) | (1,600.00) | (3,600.00) |
| **8894 Septic Permits, Fees, Admin** | 0.00 | 0.00 | 0.00 | (10,558.00) | (42,355.31) | (85,086.73) | (116,238.58) | (4,177.00) | (6,962.84) | (265,378.46) |
| **8895 DNR Flood Imp Proj - Engineer** | (6,673.00) | (54,384.11) | (29,242.00) | (157,437.85) | (198,277.10) | (67,890.74) | (14,066.00) | 0.00 | 0.00 | (527,970.80) |
| **8896 Sanitary Sewer Imp** | 0.00 | (395.00) | (87,311.07) | (293,780.46) | (194,199.55) | (152,850.73) | (73,817.14) | (14,579.82) | (1,638.92) | (818,572.69) |
| **8897 Septic Construction Eng'g** | 0.00 | 0.00 | 0.00 | (540.77) | (9,048.00) | (8,545.49) | (151,858.16) | (39,659.80) | (3,484.28) | (213,136.50) |
| **8898 Flood Mitigation/ROW Serv** | 0.00 | (9,754.75) | (4,480.00) | (19,787.25) | (87,667.80) | (18,935.00) | (14,085.50) | 0.00 | 0.00 | (154,710.30) |
| **8899 Village Improvements** | 0.00 | 0.00 | (33,513.00) | (28,452.75) | 0.00 | (22,669.68) | (1,305,268.17) | (431,584.90) | (24,873.75) | (1,846,362.25) |
| **8901 Septic Construction** | 0.00 | 0.00 | 0.00 | 0.00 | 0.00 | 0.00 | (12,047,008.52) | (1,596,291.03) | 47,774.60 | (13,595,524.95) |
| **Total B. Exp** | (6,673.00) | (436,755.02) | (935,490.40) | (523,191.03) | (1,220,493.09) | (368,513.32) | (17,594,546.09) | (2,088,660.32) | (2,605.91) | (23,176,928.18) |
| **C. Transfers** | | | | | | | | | | |
| **6913 Trf fr 120 Street Improvements** | 0.00 | 0.00 | 0.00 | 0.00 | 0.00 | 0.00 | 805,497.42 | (120,745.17) | 0.00 | 684,752.25 |
| **Total C. Transfers** | 0.00 | 0.00 | 0.00 | 0.00 | 0.00 | 0.00 | 805,497.42 | (120,745.17) | 0.00 | 684,752.25 |
| **Total 805 City InfraStructure Imp Fd** | (6,673.00) | 20,018.10 | 17,756.20 | (428,187.77) | 2,670,839.39 | (218,911.10) | (2,168,251.65) | (702,539.47) | 1,630,997.96 | 815,048.66 |
| **TOTAL** | **(6,673.00)** | **20,018.10** | **17,756.20** | **(428,187.77)** | **2,670,839.39** | **(218,911.10)** | **(2,168,251.65)** | **(702,539.47)** | **1,630,997.96** | **815,048.66** |

M1

# City of Afton
## #805 City Infra-Structure Imp Projects - Detail by Account
### January through July 2019

| Type | Date | Num | Source Name | Memo | Debit | Credit | Balance |
|---|---|---|---|---|---|---|---|
| **4853 · County Share Dwntwn/Septic Proj** | | | | | | | |
| Deposit | 06/20/2019 | 481670 | | Wash Cty: May 2019 Share of Downtown Projects | | 21,365.98 | 21,365.98 |
| Total 4853 · County Share Dwntwn/Septic Proj | | | | | 0.00 | 21,365.98 | 21,365.98 |
| **4862 · CWRF L 054 Loan Proceeds** | | | | | | | |
| Deposit | 01/28/2019 | 1500006227 | | MPFA CWRF L 054 FY 2017 19 | | 475.81 | 475.81 |
| Deposit | 02/26/2019 | 1500006301 | | MPFA CWRF L 054 FY 2017 20 | | 15,751.82 | 16,227.63 |
| Deposit | 04/25/2019 | 1500006438 | | MPFA CWRF L 054 FY 2017 21 | | 1,917.24 | 18,144.87 |
| Total 4862 · CWRF L 054 Loan Proceeds | | | | | 0.00 | 18,144.87 | 18,144.87 |
| **4864 · CWRF L 055 Loan Proceeds** | | | | | | | |
| Deposit | 01/28/2019 | 1500006228 | | MPFA CWRF L 055 FY 2017 9 | | 3,349.83 | 3,349.83 |
| Deposit | 04/25/2019 | 1500006439 | | MPFA CWRF L 055 FY 2017 10 | | 7,597.59 | 10,947.42 |
| Total 4864 · CWRF L 055 Loan Proceeds | | | | | 0.00 | 10,947.42 | 10,947.42 |
| **4865 · PSIG G 056 Grant** | | | | | | | |
| Deposit | 02/26/2019 | 1500006302 | | MPFA PSIG G 056 FY 2017 17 | | 245,930.21 | 245,930.21 |
| Total 4865 · PSIG G 056 Grant | | | | | 0.00 | 245,930.21 | 245,930.21 |
| **4894 · MnDNR Grant - Other** | | | | | | | |
| Deposit | 02/06/2019 | FM00548814 | | DNR OMB Pay Request #15: 651-259-5566 | | 1,280,016.00 | 1,280,016.00 |
| Total 4894 · MnDNR Grant - Other | | | | | 0.00 | 1,280,016.00 | 1,280,016.00 |
| **4896 · Flood Levy Imp Proj - Tax Levy** | | | | | | | |
| Deposit | 06/30/2019 | | | DNR Match | | 47,500.00 | 47,500.00 |
| Total 4896 · Flood Levy Imp Proj - Tax Levy | | | | | 0.00 | 47,500.00 | 47,500.00 |
| **4917 · Int Inc - City Infrastructr Fd** | | | | | | | |
| General Jou... | 01/31/2019 | interest | | Interest Income | | 0.43 | 0.43 |
| General Jou... | 01/31/2019 | interest | | Interest Income | | 1.28 | 1.71 |
| General Jou... | 02/28/2019 | interest | | Interest Income | | 1,376.06 | 1,377.77 |
| General Jou... | 03/01/2019 | Bank Diff | | Bank difference | | 0.01 | 1,377.78 |
| General Jou... | 03/31/2019 | interest | | Interest Income | | 2,233.96 | 3,611.74 |
| General Jou... | 04/30/2019 | interest | | Interest Income | | 1,777.73 | 5,389.47 |
| General Jou... | 05/31/2019 | interest | | Interest Income | | 1,667.70 | 7,057.17 |
| General Jou... | 06/30/2019 | interest | | Interest Income | | 1,306.29 | 8,363.46 |
| General Jou... | 07/31/2019 | interest | | Interest Income | | 1,335.93 | 9,699.39 |
| Total 4917 · Int Inc - City Infrastructr Fd | | | | | 0.00 | 9,699.39 | 9,699.39 |
| **8800 · DNR Flood Imp Expense** | | | | | | | |
| **8891 · DNR Flood Imp - Prop Purch/Exp** | | | | | | | |
| Bill | 02/28/2019 | 022819 | Xcel Energy {EFT} (51-0895 3451) | Eastwood - Septic Property 2318 St Croix Trl S Meter# 96987678 Premises #302409557 | 67.07 | | (67.07) |
| Bill | 03/31/2019 | 033119 | Xcel Energy {EFT} (51-0895 3451) | Eastwood - Septic Property 2318 St Croix Trl S Meter# 96987678 Premises #302409557 | 51.29 | | (118.36) |
| Bill | 04/30/2019 | 043019 | Xcel Energy {EFT} (51-0895 3451) | Eastwood - Septic Property 2318 St Croix Trl S Meter# 96987678 Premises #302409557 | 29.96 | | (148.32) |
| Bill | 04/30/2019 | 043019a | Xcel Energy {EFT} (51-0895 3451) | Eastwood - Septic Property 2318 St Croix Trl S Meter# 96987678 Premises #302409557 | 28.96 | | (177.28) |
| Bill | 05/31/2019 | 053119 | Xcel Energy {EFT} (51-0895 3451) | Eastwood - Septic Property 2318 St Croix Trl S Meter# 96987678 Premises #302409557 | 26.12 | | (203.40) |
| Bill | 07/31/2019 | 073119 | Xcel Energy {EFT} (51-0895 3451) | Eastwood - Septic Property 2318 St Croix Trl S Meter# 96987678 Premises #302409557 | 12.73 | | (216.13) |
| Bill | 07/31/2019 | 073119 | Xcel Energy {EFT} (51-0895 3451) | Eastwood - Septic Property 2318 St Croix Trl S Meter# 96987678 Premises #302409557 | 20.59 | | (236.72) |
| Total 8891 · DNR Flood Imp - Prop Purch/Exp | | | | | 236.72 | 0.00 | (236.72) |
| **8892 · Dwntwn Imp - Easemnts & Damages** | | | | | | | |
| Bill | 02/28/2019 | Appraisal re Easemnt | Afton St. Croix Company | Reimb for Afton St Croix obtaining its own appraisal re. Easement for Downtown Village Imp Proj | 5,000.00 | | (5,000.00) |
| Bill | 07/31/2019 | 19-0311afjh | McKinzie Metro Appraisal | Court hearings, etc re. easement acquisitions for Downtown Project | 6,050.00 | | (11,050.00) |
| Bill | 07/31/2019 | 17-0321afj2 | McKinzie Metro Appraisal | Printed copies of appraisal reports re. easement acquisitions for Downtown Project | 534.00 | | (11,584.00) |
| Total 8892 · Dwntwn Imp - Easemnts & Damages | | | | | 11,584.00 | 0.00 | (11,584.00) |
| **8893 · Single Audit Expense** | | | | | | | |
| Bill | 03/31/2019 | 252431 | CarlsonSV (Single Audit) | Final billing on 2017 single audit | 1,600.00 | | (1,600.00) |

M2

# City of Afton
## #805 City Infra-Structure Imp Projects - Detail by Account
### January through July 2019

| Type | Date | Num | Source Name | Memo | Debit | Credit | Balance |
|---|---|---|---|---|---|---|---|
| Total 8893 · Single Audit Expense | | | | | 1,600.00 | 0.00 | (1,600.00) |
| **8894 · Septic Permits, Fees, Admin** | | | | | | | |
| Bill | 02/27/2019 | 2017ATmpBds | Niedzwiecki, Thomas H. | Assistance with Cash Flow re. Repayment of 2017A Temp Imp Bonds | 535.00 | | (535.00) |
| Bill | 02/28/2019 | Feb2019 | Holstad & Knaak, PLC | Condemnation | 834.93 | | (1,369.93) |
| Bill | 03/31/2019 | March2019 | Holstad & Knaak, PLC | Condemnation | 1,825.06 | | (3,194.99) |
| Bill | 03/31/2019 | 2 | WSB (City Engineer) | Condemnation | 83.00 | | (3,277.99) |
| Bill | 04/17/2019 | 10000068357 | Minnesota Pollution Control Agency | Afton WWTP 2318 St Croix Trl S: Wastewater Annual permit fees | 505.00 | | (3,782.99) |
| Bill | 04/30/2019 | April2019 | Holstad & Knaak, PLC | Condemnation | 3,179.85 | | (6,962.84) |
| Total 8894 · Septic Permits, Fees, Admin | | | | | 6,962.84 | 0.00 | (6,962.84) |
| **8896 · Sanitary Sewer Improvements** | | | | | | | |
| Bill | 06/30/2019 | 11903788 | Wenck Associates Inc. | Wastewater system engineering | 1,006.92 | | (1,006.92) |
| Bill | 07/31/2019 | 11904967 | Wenck Associates Inc. | Wastewater system engineering | 632.00 | | (1,638.92) |
| Total 8896 · Sanitary Sewer Improvements | | | | | 1,638.92 | 0.00 | (1,638.92) |
| **8897 · Septic Construction Eng'g** | | | | | | | |
| Bill | 01/31/2019 | 11900195 | Wenck Associates Inc. | Afton LSTS - bidding, contruction and post construction services | 1,012.08 | | (1,012.08) |
| Bill | 02/28/2019 | 11900979 | Wenck Associates Inc. | Afton LSTS - bidding, contruction and post construction services | 1,050.20 | | (2,062.28) |
| Bill | 02/28/2019 | 11900196 | Wenck Associates Inc. | Afton LSTS - bidding, contruction and post construction services | 790.00 | | (2,852.28) |
| Bill | 03/31/2019 | 11901631 | Wenck Associates Inc. | Afton LSTS - bidding, contruction and post construction services | 632.00 | | (3,484.28) |
| Total 8897 · Septic Construction Eng'g | | | | | 3,484.28 | 0.00 | (3,484.28) |
| **8899 · Village Improvements** | | | | | | | |
| General Jou... | 01/01/2019 | Dwtn Imp | 805 City InfraStructure Imp Fd:B. Exp:8899 Vi... | Great Northern Landscaping - 12/31/18 Retainage on Downtown Imp | | 4,655.75 | 4,655.75 |
| Bill | 02/28/2019 | 26 | WSB (Downtown Village Imp Proj) | Downtown Village Improvement Project No. 01856-520 | 10,993.50 | | (6,337.75) |
| Bill | 03/31/2019 | 27 | WSB (Downtown Village Imp Proj) | Downtown Village Improvement Project No. 01856-520 | 12,387.50 | | (18,725.25) |
| Bill | 05/31/2019 | 29 April 2019 | WSB (Downtown Village Imp Proj) | Downtown Village Improvement Project No. 01856-520 | 1,770.00 | | (20,495.25) |
| Bill | 05/31/2019 | 28 March 2019 | WSB (Downtown Village Imp Proj) | Downtown Village Improvement Project No. 01856-520 | 2,415.50 | | (22,910.75) |
| Bill | 07/31/2019 | 6 | WSB (City Engineer) | Downtown Project | 1,963.00 | | (24,873.75) |
| Total 8899 · Village Improvements | | | | | 29,529.50 | 4,655.75 | (24,873.75) |
| **8901 · Septic Construction** | | | | | | | |
| General Jou... | 01/01/2019 | Sewer Retng | 805 City InfraStructure Imp Fd:B. Exp:8901 Se... | Reverse Geislinger - 12/31/18 Retainage on Sanitary Sewer (Pay Voucher #19) | | 291,343.82 | 291,343.82 |
| Bill | 04/30/2019 | Pay Voucher #21 | Geislinger and Sons, Inc. | Proj 01856-52: Downtown Village Imp: Pay Voucher #21 | 243,569.22 | | 47,774.60 |
| Total 8901 · Septic Construction | | | | | 243,569.22 | 291,343.82 | 47,774.60 |
| Total 8800 · DNR Flood Imp Expense | | | | | 298,605.48 | 295,999.57 | (2,605.91) |
| **TOTAL** | | | | | **298,605.48** | **1,929,603.44** | **1,630,997.96** |

M3

# City of Afton
## 806 PFA Loans & 807 Tmp Imp Bond Debt Serv Fds - LTD Summary
### January 2015 through July 2019

| | Jan - Dec 15 | Jan - Dec 16 | Jan - Dec 17 | Jan - Dec 18 | Jan - Jul 19 | TOTAL |
|---|---|---|---|---|---|---|
| **806 PFA Loan Debt Serv** | | | | | | |
| **4879 Sanitary Sewr Spec Assessments** | 0.00 | 0.00 | 102,054.25 | 295,940.95 | 75,993.65 | 473,988.85 |
| **4899 Levy PFA Loan Debt Serv** | 8,000.00 | 70,000.00 | 70,000.00 | 27,000.00 | 35,000.00 | 210,000.00 |
| **4925 PFA Loan Debt Serv Interest** | 0.00 | 0.00 | 0.00 | 19.31 | 3,841.38 | 3,860.69 |
| **7743 2017 Storm Wtr PFA Issue Exp** | 0.00 | 0.00 | (8,000.00) | 0.00 | 0.00 | (8,000.00) |
| **7744 2017 L054 Storm Wtr PFA Int Exp** | 0.00 | 0.00 | 0.00 | (7,052.13) | (4,623.78) | (11,675.91) |
| **7745 2017 L055 Sanitary Sewer PFA Int Exp** | 0.00 | 0.00 | 0.00 | (11,738.68) | (5,785.63) | (17,524.31) |
| **7746 2017 Sanitary Sewer PFA Issue Exp** | 0.00 | 0.00 | (8,060.93) | 0.00 | (850.00) | (8,910.93) |
| **7749 Dwtn Imp - Special Assess Exp** | 0.00 | 0.00 | (105,179.00) | (54,594.60) | (48,888.00) | (208,661.60) |
| **7754 2017 L054 Storm Wtr PFA Principal** | 0.00 | 0.00 | 0.00 | (24,815.00) | 0.00 | (24,815.00) |
| **7755 2017 L055 Sanitary Sewer PFA Princpl** | 0.00 | 0.00 | 0.00 | (28,959.00) | 0.00 | (28,959.00) |
| **Total 806 PFA Loan Debt Serv** | 8,000.00 | 70,000.00 | 50,814.32 | 195,800.85 | 54,687.62 | 379,302.79 |
| **807 Downtwn Tmp Imp Debt Service** | | | | | | |
| **4898 Levy Dwntwn Imp 2017A Tmp Imp Bd** | 0.00 | 28,000.00 | 28,000.00 | 73,000.00 | 18,500.00 | 147,500.00 |
| **4926 Tmp Imp Bd Debt Serv Interest** | 0.00 | 0.00 | 0.00 | 1.51 | 493.87 | 495.38 |
| **6854 Trf fr Genl re Tmp Bond Debt** | 0.00 | 0.00 | 0.00 | 15,000.00 | 0.00 | 15,000.00 |
| **7724 2017A Dwntwn Imp Bd Admin Exp** | 0.00 | 0.00 | 0.00 | (2,332.00) | (810.00) | (3,142.00) |
| **7737 Int Exp 2015A Dwntwn Tmp Imp Bd** | (19,948.45) | (28,162.50) | (7,040.61) | 0.00 | 0.00 | (55,151.56) |
| **7739 Int Exp 2017A Dwntwn Tmp Imp Bd** | 0.00 | 0.00 | (16,027.00) | (30,690.00) | (15,345.00) | (62,062.00) |
| **Total 807 Downtwn Tmp Imp Debt Service** | (19,948.45) | (162.50) | 4,932.39 | 54,979.51 | 2,838.87 | 42,639.82 |
| **TOTAL** | **(11,948.45)** | **69,837.50** | **55,746.71** | **250,780.36** | **57,526.49** | **421,942.61** |

NI

08/14/19

# City of Afton
# #725 2014A & #726 2017B Road Bond Debt Fds - 5 Year Summary
## January 2015 through July 2019

| | Jan - Dec 15 | Jan - Dec 16 | Jan - Dec 17 | Jan - Dec 18 | Jan - Jul 19 | TOTAL |
|---|---|---|---|---|---|---|
| **725 2014A Road Debt Serv Fd** | | | | | | |
| **4715 2014A Road Bond Proceeds** | 2,950,000.00 | 0.00 | 0.00 | 0.00 | 0.00 | 2,950,000.00 |
| **4725 2014A Debt Serv Levy - Road Bond** | 310,000.00 | 260,000.00 | 260,000.00 | 170,000.00 | 137,500.00 | 1,137,500.00 |
| **4916 Interest Inc - Road Debt Serv** | 98.88 | 512.99 | 2,488.98 | 7,168.93 | 1,601.20 | 11,870.98 |
| **7715 2014A Road Bond Principal** | 0.00 | (140,000.00) | (165,000.00) | (180,000.00) | (195,000.00) | (680,000.00) |
| **7725 Interest Expense - 2005A Road Bonds** | (10,852.71) | 0.00 | 0.00 | 0.00 | 0.00 | (10,852.71) |
| **7726 2005A Bond Admin Expense** | 0.00 | 0.00 | 0.00 | 0.00 | 0.00 | 0.00 |
| **7735 2014A Refund Bds Int Exp** | (62,625.83) | (99,000.00) | (94,425.00) | (89,250.00) | (83,625.00) | (428,925.83) |
| **7736 2014A Refund Bd Admin Exp** | 234,040.24 | (1,900.00) | 0.00 | (1,882.00) | (500.00) | 229,758.24 |
| **Total 725 2014A Road Debt Serv Fd** | 3,420,660.58 | 19,612.99 | 3,063.98 | (93,963.07) | (140,023.80) | 3,209,350.68 |
| **726 2017B Road Debt Serv Fd** | | | | | | |
| **4726 2017B Debt Serv Levy - Road Bond** | 0.00 | 0.00 | 0.00 | 480,000.00 | 195,000.00 | 675,000.00 |
| **4923 2017B Road Debt Interest** | 0.00 | 0.00 | 0.00 | 58.09 | 884.48 | 942.57 |
| **7716 2017B Road Bond Principal** | 0.00 | 0.00 | 0.00 | 0.00 | (320,000.00) | (320,000.00) |
| **7742 2017B Int Exp $3.5MM Road Bond** | 0.00 | 0.00 | 0.00 | (88,734.94) | (70,575.00) | (159,309.94) |
| **7747 2017B $3.5MM Road Bd Admin Exp** | 0.00 | 0.00 | 0.00 | (1,936.00) | 0.00 | (1,936.00) |
| **Total 726 2017B Road Debt Serv Fd** | 0.00 | 0.00 | 0.00 | 389,387.15 | (194,690.52) | 194,696.63 |
| **TOTAL** | **3,420,660.58** | **19,612.99** | **3,063.98** | **295,424.08** | **(334,714.32)** | **3,404,047.31** |

# City of Afton
## #810 City Dock Fund - Detail by Account
### January through July 2019

| Type | Date | Num | Source Name | Memo | Debit | Credit | Balance |
|---|---|---|---|---|---|---|---|
| **4812 · Dock Lease Revenue** | | | | | | | |
| Dep... | 06/17/2019 | 44440 | | Afton St Croix Co - 2019 Dock Lease Pymt | | 3,850.00 | 3,850.00 |
| Total 4812 · Dock Lease Revenue | | | | | 0.00 | 3,850.00 | 3,850.00 |
| **4909 · Dock 4M Fd - Interest Earnings** | | | | | | | |
| Gen... | 01/31/2019 | Interest | | Interest Income | | 124.51 | 124.51 |
| Gen... | 02/28/2019 | Interest | | Interest Income | | 111.83 | 236.34 |
| Gen... | 03/31/2019 | Interest | | Interest Income | | 123.23 | 359.57 |
| Gen... | 04/30/2019 | Interest | | Interest Income | | 119.42 | 478.99 |
| Gen... | 05/31/2019 | Interest | | Interest Income | | 121.61 | 600.60 |
| Gen... | 06/30/2019 | Interest | | Interest Income | | 117.51 | 718.11 |
| Gen... | 07/31/2019 | Interest | | Interest Income | | 121.34 | 839.45 |
| Total 4909 · Dock 4M Fd - Interest Earnings | | | | | 0.00 | 839.45 | 839.45 |
| **8830 · City Dock Improvements** | | | | | | | |
| Bill | 04/17/2019 | inv-deposit | Meeco Sullivan | Heavy duty underwater column angles, braces, plates, truss, decking, ... | 0.00 | | 0.00 |
| Total 8830 · City Dock Improvements | | | | | 0.00 | 0.00 | 0.00 |
| **TOTAL** | | | | | **0.00** | **4,689.45** | **4,689.45** |

# City of Afton
## General Fd Streets, Rehab & Public Works - Detail by Account
### January through July 2019

| Type | Date | Num | Source Name | Memo | Amount |
|---|---|---|---|---|---|
| **5820 · Gravel Road Maintenance** | | | | | |
| Bill | 04/30/2019 | 609 | Tri-County Services (Streets, Other) | road grading | (760.00) |
| Bill | 05/31/2019 | 189 | Croixcavating | Class 5 to Trading Post Rd | (60.00) |
| Bill | 05/31/2019 | 14531 | Rumpca Excavating Inc | lime rock, C5 | (135.27) |
| Bill | 05/31/2019 | 620 | Tri-County Services (Streets, Other) | road grade | (760.00) |
| Bill | 06/26/2019 | 190 | Croixcavating | Class 5 30th St | (50.00) |
| Bill | 07/31/2019 | 192 | Croixcavating | Carver park driveway, concrete curbs to 33th st | (135.00) |
| Bill | 07/31/2019 | 639 | Tri-County Services (Streets, Other) | road grader 60th oak green | (570.00) |
| Bill | 07/31/2019 | 658 | Tri-County Services (Streets, Other) | road grade 60th and trading post | (475.00) |
| Bill | 07/31/2019 | 660 | Tri-County Services (Streets, Other) | grade mount hope | (237.50) |
| Total 5820 · Gravel Road Maintenance | | | | | (3,182.77) |
| **5825 · Crackseal/Seal Coat/Shouldering** | | | | | |
| Bill | 07/31/2019 | 14710 | Rumpca Excavating Inc | lime rock, C5 | (103.61) |
| Bill | 07/31/2019 | 14572 | Rumpca Excavating Inc | lime rock, C5 | (201.19) |
| Bill | 07/31/2019 | 14744 | Rumpca Excavating Inc | lime rock, C5, riprap classII thru IV | (866.80) |
| Bill | 07/31/2019 | 653 | Tri-County Services (Streets, Other) | dump truck with shouldering machine | (4,947.50) |
| Bill | 07/31/2019 | 652 | Tri-County Services (Streets, Other) | rip rap odell ave | (380.00) |
| Total 5825 · Crackseal/Seal Coat/Shouldering | | | | | (6,499.10) |
| **5830 · Snow & Ice Control** | | | | | |
| Bill | 01/31/2019 | 578 | Tri-County Services (Snow Ice) | Snow & Ice Control 1/17/19 to 2/5/19 | (11,560.00) |
| Bill | 02/28/2019 | Snow Feb 2019 | Jason Lee Johnson | Snow Removal 23.5 hours @ $18 | (423.00) |
| Bill | 02/28/2019 | 10108 | M.R.I. | Vaccuum excavator with Crew - cleaned ice out of culvert | (750.00) |
| Bill | 02/28/2019 | 587 | Tri-County Services (Snow Ice) | Snow & Ice Control 2/6/19 to 2/28/19 | (37,251.25) |
| Bill | 03/31/2019 | 487878 | Holst Excavating | Sand and Salt 35.23 @ $39.00 | (1,373.97) |
| Bill | 03/31/2019 | 10113 | M.R.I. | Vaccuum excavator with Crew - cleaned ice out of culvert 3/1/19 | (1,200.00) |
| Bill | 03/31/2019 | 596 | Tri-County Services (Snow Ice) | Snow & Ice Control 2/28/19 to 3/15/19 | (12,835.00) |
| Bill | 04/30/2019 | 155431 | Wash Cty (Rd & Bridge)(Trans & Phys Dev) | snow & ice control 2019 sand and salt | (23,987.60) |
| Bill | 04/30/2019 | 611 | Tri-County Services (Snow Ice) | Snow & Ice Control 4/11 & 4/12 | (3,485.00) |
| Bill | 07/31/2019 | 158160 | Wash Cty (Rd & Bridge)(Trans & Phys Dev) | sand and salt 4/9 & 4/29 | (3,115.87) |
| Total 5830 · Snow & Ice Control | | | | | (95,981.69) |
| **5835 · Surf Maint/Bit Patch/Sweeping** | | | | | |
| Bill | 03/31/2019 | 595 | Tri-County Services (Streets, Other) | tar trailer pot hole patching | (1,615.00) |
| Bill | 04/17/2019 | in34221 | City of Saint Paul | asphalt mix | (310.60) |
| Bill | 04/30/2019 | 610 | Tri-County Services (Streets, Other) | street sweeping | (3,600.00) |
| Bill | 05/31/2019 | 621 | Tri-County Services (Streets, Other) | street sweep | (160.00) |
| Bill | 05/31/2019 | 617 | Tri-County Services (Streets, Other) | skid loader & dump truck tar chunks oak green | (380.00) |
| Bill | 07/31/2019 | in35881 | City of Saint Paul | asphalt mix | (811.80) |
| Bill | 07/31/2019 | 638 | Tri-County Services (Streets, Other) | pot holes 30th, 8th, valley creek | (3,632.50) |
| Bill | 07/31/2019 | 659 | Tri-County Services (Streets, Other) | gravel for oak green | (570.00) |
| Total 5835 · Surf Maint/Bit Patch/Sweeping | | | | | (11,079.90) |
| **5845 · Brush/Tree/Sod/Seed** | | | | | |
| Bill | 01/31/2019 | 577 | Tri-County Services (Streets, Other) | Tree trimming, chipping and brushing: 40th to 30 street, 50th & Trading Post | (9,677.50) |
| Bill | 03/31/2019 | 599 | Tri-County Services (Streets, Other) | vac steam culverts: all trading post, river road, 42 street, 50 street | (3,552.50) |
| Bill | 06/30/2019 | 3253064-00 | County Materials Corporation | parking curb | (413.00) |
| Bill | 06/30/2019 | 6686938 | SavATree | Stump grinding: near park pavillion and south of Selma's | (170.00) |
| Bill | 07/31/2019 | 6706332 | SavATree | up hill west of 33rd st off of st croix trail | (700.00) |
| Bill | 07/31/2019 | 640 | Tri-County Services (Streets, Other) | trees down call out sheriff | (570.00) |
| Bill | 07/31/2019 | 654 | Tri-County Services (Streets, Other) | 2 guys trying to find culvert river road with vac | (285.00) |
| Bill | 07/31/2019 | 655 | Tri-County Services (Streets, Other) | dump truck, skid steer, ditch work culvert, grade and seed | (1,140.00) |



Q1

# City of Afton
## General Fd Streets, Rehab & Public Works - Detail by Account
### January through July 2019

| Type | Date | Num | Source Name | Memo | Amount |
|---|---|---|---|---|---|
| Bill | 07/31/2019 | 661 | Tri-County Services (Streets, Other) | ditch mow | (5,747.50) |
| Total 5845 · Brush/Tree/Sod/Seed | | | | | (22,255.50) |
| **5850 · Street Lighting** | | | | | |
| Bill | 01/31/2019 | 013119 | Xcel Energy {EFT} (51-6223 9212) | Street Lighting Service | (121.18) |
| Bill | 01/31/2019 | 013119 | Xcel Energy {EFT} (51-11957 7713) | Acct No. 51-0011957771-3 : 3293 SAINT CROIX TRL S. Meter 7626901 Premises 304699626 Street Li... | (131.58) |
| Bill | 02/28/2019 | 022819 | Xcel Energy {EFT} (51-6223 9212) | Street Lighting Service | (0.63) |
| Bill | 02/28/2019 | 022819 | Xcel Energy {EFT} (51-11957 7713) | Acct No. 51-0011957771-3 : 3293 SAINT CROIX TRL S. Meter 7626901 Premises 304699626 Street Li... | (146.15) |
| Bill | 03/31/2019 | 033119 | Xcel Energy {EFT} (51-6223 9212) | Street Lighting Service | (62.02) |
| Bill | 03/31/2019 | 033119 | Xcel Energy {EFT} (51-11957 7713) | Acct No. 51-0011957771-3 : 3293 SAINT CROIX TRL S. Meter 7626901 Premises 304699626 Street Li... | (121.24) |
| Bill | 04/30/2019 | 043019 | Xcel Energy {EFT} (51-6223 9212) | Street Lighting Service | (60.87) |
| Bill | 04/30/2019 | 043019 | Xcel Energy {EFT} (51-11957 7713) | Acct No. 51-0011957771-3 : 3293 SAINT CROIX TRL S. Meter 7626901 Premises 304699626 Street Li... | (115.32) |
| Bill | 05/31/2019 | 053119 | Xcel Energy {EFT} (51-6223 9212) | Street Lighting Service | (61.35) |
| Bill | 05/31/2019 | 053119 | Xcel Energy {EFT} (51-11957 7713) | Acct No. 51-0011957771-3 : 3293 SAINT CROIX TRL S. Meter 7626901 Premises 304699626 Street Li... | (94.32) |
| Bill | 06/30/2019 | 063019 | Xcel Energy {EFT} (51-6223 9212) | Street Lighting Service | (60.85) |
| Bill | 07/31/2019 | 073119 | Xcel Energy {EFT} (51-6223 9212) | Street Lighting Service | (37.77) |
| Bill | 07/31/2019 | 073119 | Xcel Energy {EFT} (51-11957 7713) | Acct No. 51-0011957771-3 : 3293 SAINT CROIX TRL S. Meter 7626901 Premises 304699626 Street Li... | (28.99) |
| Total 5850 · Street Lighting | | | | | (1,042.27) |
| **5860 · Signs & Signals** | | | | | |
| Bill | 01/31/2019 | 190104 | Safety Signs, LLC | Traffic Signs | (3,900.00) |
| Bill | 03/31/2019 | 602 | Tri-County Services (Streets, Other) | pick up road closed signs | (95.00) |
| Bill | 04/30/2019 | 10-952314 | Econo Signs | Signs | (227.90) |
| Bill | 05/31/2019 | 10-952806 | Econo Signs | Signs | (183.06) |
| Bill | 05/31/2019 | 623 | Tri-County Services (Streets, Other) | installation of ballards | (1,950.00) |
| Bill | 06/26/2019 | 10-953378 | Econo Signs | Signs | (547.62) |
| Bill | 07/31/2019 | trfinv013593 | Newman Traffic Signs | Various signs | (403.01) |
| Total 5860 · Signs & Signals | | | | | (7,306.59) |
| **5870 · Other Road Maintenance** | | | | | |
| Bill | 01/30/2019 | 9000156 | Gopher State One Call | 2019 Facility Operator Fee | (50.00) |
| Bill | 01/31/2019 | 8120154 | Gopher State One Call | Cafton01 FTP Tickets | (2.70) |
| Bill | 01/31/2019 | 9010157 | Gopher State One Call | Cafton01 FTP Tickets | (2.70) |
| Bill | 03/31/2019 | 95746 | Menards - Hudson | pothole patch | (15.78) |
| Bill | 03/31/2019 | 9030162 | Gopher State One Call | Cafton01 FTP Tickets | (1.35) |
| Bill | 04/30/2019 | 040163 | Gopher State One Call | Cafton01 FTP Tickets | (16.20) |
| Gene... | 05/15/2019 | PRExpReimb | | Ken Johnson fuel | (85.43) |
| Bill | 05/31/2019 | 9050164 | Gopher State One Call | Cafton01 FTP Tickets | (20.25) |
| Bill | 06/30/2019 | 9060164 | Gopher State One Call | Cafton01 FTP Tickets | (20.25) |
| Bill | 06/30/2019 | 2762 | Menards - Hudson | safety cone | (274.68) |
| Bill | 06/30/2019 | 109847366 | Uline | reflective bollard sleeve | (432.00) |
| Bill | 07/31/2019 | 9070164 | Gopher State One Call | Cafton01 FTP Tickets | (9.45) |
| Bill | 07/31/2019 | 657 | Tri-County Services (Streets, Other) | put out barriers and signs odell and trading post | (1,000.00) |
| Total 5870 · Other Road Maintenance | | | | | (1,930.79) |
| **5920 · Repair & Maint Equipment** | | | | | |
| Bill | 01/31/2019 | w68100 | Frontier Ag & Turf (New Richmond) | Lawn Mower 749 | (212.57) |
| Bill | 03/31/2019 | w69792 | Frontier Ag & Turf (New Richmond) | Snowblower 54 inch | (435.76) |
| Bill | 04/17/2019 | w70455 | Frontier Ag & Turf (New Richmond) | lawn mower x749 | (378.20) |
| Bill | 04/17/2019 | w70454 | Frontier Ag & Turf (New Richmond) | tractor 4700 | (314.46) |
| Bill | 05/31/2019 | w28638 | Frontier Ag & Turf (Hastings) | Repair Tractor 4700 | (549.67) |
| Bill | 07/31/2019 | w72620 | Frontier Ag & Turf (New Richmond) | lawn mower with 54 x749 | (868.28) |
| Bill | 07/31/2019 | w73797 | Frontier Ag & Turf (New Richmond) | Z950M 60 in | (135.24) |



Q2

# City of Afton
## General Fd Streets, Rehab & Public Works - Detail by Account
### January through July 2019

| Type | Date | Num | Source Name | Memo | Amount |
|---|---|---|---|---|---|
| Bill | 07/31/2019 | w73798 | Frontier Ag & Turf (New Richmond) | Lawn mower x749 54 in | (119.29) |
| Total 5920 · Repair & Maint Equipment | | | | | (3,013.47) |
| **5925 · Fuel & Lubricants** | | | | | |
| Gene... | 04/22/2019 | Petty Cash | | Petty Cash Activity 01/16/19 thru 04/22/19 | (45.08) |
| Total 5925 · Fuel & Lubricants | | | | | (45.08) |
| **TOTAL** | | | | | **(152,337.16)** |

Q3

# City of Afton
## Customer Receipts and Other Deposits - Sorted by Account
### July 2019

| Type | Date | Num | Name | Memo | Class | Debit | Credit |
|---|---|---|---|---|---|---|---|
| **100 · 4M 101/USB 2934 - General Fund** | | | | | | | |
| Deposit | 07/02/2019 | | | Deposit (Part of $37,504.25 7/2/19) | | 37,144.25 | |
| Deposit | 07/02/2019 | | | Deposit (Part of $37,504.25 7/2/19) | | 360.00 | |
| Deposit | 07/09/2019 | | | Deposit | | 4,551.00 | |
| Deposit | 07/12/2019 | | | Fines&Fees | | 1,104.27 | |
| Deposit | 07/18/2019 | | | Pera SCA MVAg | | 317.00 | |
| Deposit | 07/23/2019 | | | Deposit | | 8,857.90 | |
| Deposit | 07/31/2019 | | | Deposit | | 30,057.00 | |
| Total 100 · 4M 101/USB 2934 - General Fund | | | | | | 82,391.42 | 0.00 |
| **2001 · Permit Escrow & Fees** | | | | | | | |
| Payment | 07/02/2019 | 78360 | Carlson, Will Z19-20 14220 60th Demo | Escrow Demo Carlson, Will Z19-20 14220 60th Demo | | | 250.00 |
| Payment | 07/02/2019 | 78360 | Carlson, Will Z19-20 14220 60th Demo | Pymt of Demo Permit Carlson, Will Z19-20 14220 60th Demo | | | 110.00 |
| Payment | 07/02/2019 | 7291 | Bursack, Chris Z19-23 3548 North View Ln | Pymt of Driveway Insp Fee Bursack, Chris Z19-23 3548 North View Ln | | | 250.00 |
| Payment | 07/02/2019 | 136 | Vermillion St Bk Z19-24 107 Main St E | Escrow Driveway Vermillion St Bk Z19-24 107 Main St E | | | 1,500.00 |
| Payment | 07/02/2019 | 136 | Vermillion St Bk Z19-24 107 Main St E | Pymt of Driveway Insp Fee Vermillion St Bk Z19-24 107 Main St E | | | 250.00 |
| Payment | 07/02/2019 | 7291 | Bursack, Chris Z19-23 3548 North View Ln | Escrow Driveway Bursack, Chris Z19-23 3548 North View Ln | | | 1,500.00 |
| Payment | 07/02/2019 | 78360 | Carlson, Will Z19-21 5550 Odell Av S | Escrow Demo Carlson, Will Z19-21 5550 Odell Av S | | | 250.00 |
| Payment | 07/02/2019 | 78360 | Carlson, Will Z19-21 5550 Odell Av S | Pymt of Demo Fee Carlson, Will Z19-21 5550 Odell Av S | | | 110.00 |
| Payment | 07/31/2019 | 6431 | Enos, Rebecca Z19-28 15234 Aft Hills | Variance Escrow Enos, Rebecca Z19-28 15234 Aft Hills | | | 600.00 |
| Payment | 07/31/2019 | 6431 | Enos, Rebecca Z19-28 15234 Aft Hills | Pymt of Variance Fee Enos, Rebecca Z19-28 15234 Aft Hills | | | 250.00 |
| Payment | 07/31/2019 | 8591 | Orth, Michael Z19-27 16226 53rd St S | Pymt of Simple Subdiv Fee Orth, Michael Z19-27 16226 53rd St S | | | 250.00 |
| Payment | 07/31/2019 | 27221 | Wiessner Z19-26 3750 Paradox End Av | Grading Escrow Wiessner Z19-26 3750 Paradox End Av | | | 1,000.00 |
| Payment | 07/31/2019 | 27221 | Wiessner Z19-26 3750 Paradox End Av | Pymt of Grading Fee Wiessner Z19-26 3750 Paradox End Av | | | 100.00 |
| Payment | 07/31/2019 | 3907 | Pesavento, Steve & Louise Z19-25 15785 Af | Driveway Escrow Pesavento, Steve & Louise Z19-25 15785 Af | | | 1,500.00 |
| Payment | 07/31/2019 | 3907 | Pesavento, Steve & Louise Z19-25 15785 Af | Pymt of Driveway Insp Fee Pesavento, Steve & Louise Z19-25 15785 ... | | | 250.00 |
| Total 2001 · Permit Escrow & Fees | | | | | | 0.00 | 8,170.00 |
| **1100 · Taxes and Other Receivables** | | | | | | | |
| **1185 · Park Deposits** | | | | | | | |
| Deposit | 07/31/2019 | 6358 | Park Deposits | Michelle Odden 7/27/19 | | | 100.00 |
| Total 1185 · Park Deposits | | | | | | 0.00 | 100.00 |
| **1190 · Other Receivables** | | | | | | | |
| Deposit | 07/23/2019 | 20190701 | Wash Cty (Prop Records & Taxpayer Serv) | Wash Cty sent in error re Bacteria & Nitrogen Tests: will be returned ... | | | 2,182.40 |
| Total 1190 · Other Receivables | | | | | | 0.00 | 2,182.40 |
| Total 1100 · Taxes and Other Receivables | | | | | | 0.00 | 2,282.40 |
| **2120 · Building Surcharges Payable** | | | | | | | |
| **2121 · Afton Bldg Surcharges Payable** | | | | | | | |
| Sales Rece... | 07/02/2019 | B19-106 | 100 Gen'l Fd:A. Rev:A05 Lic, Fees & Permits:4400 Afton Bldg ... | Afton Surcharges | Afton Bldg Insp Fees:Hase, Erin 12390 8th St Ct | | 10.00 |
| Sales Rece... | 07/02/2019 | B19-105 | 100 Gen'l Fd:A. Rev:A05 Lic, Fees & Permits:4400 Afton Bldg ... | Afton Surcharges | Afton Bldg Insp Fees:Bursack, Chris & Winte, Heidi 2 | | 290.00 |
| Sales Rece... | 07/02/2019 | B19-104 | 100 Gen'l Fd:A. Rev:A05 Lic, Fees & Permits:4400 Afton Bldg ... | Afton Surcharges | Afton Bldg Insp Fees:Nichols, Dale 15685 St Crx Trl | | 1.00 |
| Sales Rece... | 07/02/2019 | B19-107 | 100 Gen'l Fd:A. Rev:A05 Lic, Fees & Permits:4400 Afton Bldg ... | Afton Surcharges | Afton Bldg Insp Fees:Windmill Marina 16052 32nd St | | 13.50 |
| Sales Rece... | 07/02/2019 | B19-103 | 100 Gen'l Fd:A. Rev:A05 Lic, Fees & Permits:4400 Afton Bldg ... | Afton Surcharges | Afton Bldg Insp Fees:Knuth, Steve & Jennifer 2249 Ne | | 480.00 |
| Sales Rece... | 07/02/2019 | B19-97 | 100 Gen'l Fd:A. Rev:A05 Lic, Fees & Permits:4400 Afton Bldg ... | Afton Surcharges | Afton Bldg Insp Fees:Sanford, Martha 762 Stagecoach | | 40.00 |
| Sales Rece... | 07/02/2019 | B19-99 | 100 Gen'l Fd:A. Rev:A05 Lic, Fees & Permits:4400 Afton Bldg ... | Afton Surcharges | Afton Bldg Insp Fees:Hartman, Todd 15081 50th St | | 40.00 |
| Sales Rece... | 07/02/2019 | B19-100 | 100 Gen'l Fd:A. Rev:A05 Lic, Fees & Permits:4400 Afton Bldg ... | Afton Surcharges | Afton Bldg Insp Fees:Hlavacek, Doug 1010 Stagecoach | | 1.00 |
| Sales Rece... | 07/02/2019 | B19-101 | 100 Gen'l Fd:A. Rev:A05 Lic, Fees & Permits:4400 Afton Bldg ... | Afton Surcharges | Afton Bldg Insp Fees:Kopitzke, Ken 4248 Odell | | 7.50 |
| Sales Rece... | 07/02/2019 | B19-108 | 100 Gen'l Fd:A. Rev:A05 Lic, Fees & Permits:4400 Afton Bldg ... | Afton Surcharges | Afton Bldg Insp Fees:Santore, David 13901 Tomahawk | | 1.00 |
| Sales Rece... | 07/02/2019 | B19-102 | 100 Gen'l Fd:A. Rev:A05 Lic, Fees & Permits:4400 Afton Bldg ... | Afton Surcharges | Afton Bldg Insp Fees:Knuth, Steve & Jennifer 2249 Ne | | 20.00 |
| Sales Rece... | 07/02/2019 | B19-98 | 100 Gen'l Fd:A. Rev:A05 Lic, Fees & Permits:4400 Afton Bldg ... | Afton Surcharges | Afton Bldg Insp Fees:Doherty, Sally 13575 40th St S | | 1.00 |
| Sales Rece... | 07/31/2019 | B19-114 | 100 Gen'l Fd:A. Rev:A05 Lic, Fees & Permits:4400 Afton Bldg ... | Afton Surcharges | Afton Bldg Insp Fees:Kassenborg, Heidi 14141 44th St | | 7.00 |
| Sales Rece... | 07/31/2019 | B19-111 | 100 Gen'l Fd:A. Rev:A05 Lic, Fees & Permits:4400 Afton Bldg ... | Afton Surcharges | Afton Bldg Insp Fees:Stagg, Leann 15851 Afton Hills | | 13.50 |
| Sales Rece... | 07/31/2019 | B19-109 | 100 Gen'l Fd:A. Rev:A05 Lic, Fees & Permits:4400 Afton Bldg ... | Afton Surcharges | Afton Bldg Insp Fees:Narducci, Gary 3475 Neal Av | | 1.00 |
| Sales Rece... | 07/31/2019 | B19-112 | 100 Gen'l Fd:A. Rev:A05 Lic, Fees & Permits:4400 Afton Bldg ... | Afton Surcharges | Afton Bldg Insp Fees:Coulter, Amy 14460 15th St Circ | | 10.00 |
| Sales Rece... | 07/31/2019 | B19-113 | 100 Gen'l Fd:A. Rev:A05 Lic, Fees & Permits:4400 Afton Bldg ... | Afton Surcharges | Afton Bldg Insp Fees:McGinn, Kate 250 Indian Trl | | 1.00 |
| Sales Rece... | 07/31/2019 | B19-135 | 100 Gen'l Fd:A. Rev:A05 Lic, Fees & Permits:4400 Afton Bldg ... | Afton Surcharges | Afton Bldg Insp Fees:Frost, George 1395 Neal Av | | 15.00 |
| Sales Rece... | 07/31/2019 | B19-121 | 100 Gen'l Fd:A. Rev:A05 Lic, Fees & Permits:4400 Afton Bldg ... | Afton Surcharges | Afton Bldg Insp Fees:Fesler, Nancy 4627 River Rd S | | 1.00 |
| Sales Rece... | 07/31/2019 | B19-118 | 100 Gen'l Fd:A. Rev:A05 Lic, Fees & Permits:4400 Afton Bldg ... | Afton Surcharges | Afton Bldg Insp Fees:Kunz, Cathy Ganz 12694 50th St | | 1.00 |
| Sales Rece... | 07/31/2019 | B19-115 | 100 Gen'l Fd:A. Rev:A05 Lic, Fees & Permits:4400 Afton Bldg ... | Afton Surcharges | Afton Bldg Insp Fees:McGinn, Kate 250 Indian Trl | | 1.00 |
| Sales Rece... | 07/31/2019 | B19-117 | 100 Gen'l Fd:A. Rev:A05 Lic, Fees & Permits:4400 Afton Bldg ... | Afton Surcharges | Afton Bldg Insp Fees:Arends, Debbie 14682 Aft Blvd S | | 1.00 |



R1

# City of Afton
## Customer Receipts and Other Deposits - Sorted by Account
### July 2019

| Type | Date | Num | Name | Memo | Class | Debit | Credit |
|---|---|---|---|---|---|---|---|
| Sales Rece... | 07/31/2019 | B19-122 | 100 Gen'l Fd:A. Rev:A05 Lic, Fees & Permits:4400 Afton Bldg ... | Afton Surcharges | Afton Bldg Insp Fees:Hulton, John 15220 Aft Hills Dr | | 16.00 |
| Sales Rece... | 07/31/2019 | B19-19 | 100 Gen'l Fd:A. Rev:A05 Lic, Fees & Permits:4400 Afton Bldg ... | Afton Surcharges | Afton Bldg Insp Fees:Truman, Jen 1674 Quant Av S | | 14.00 |
| Sales Rece... | 07/31/2019 | B19-125 | 100 Gen'l Fd:A. Rev:A05 Lic, Fees & Permits:4400 Afton Bldg ... | Afton Surcharges | Afton Bldg Insp Fees:Kopitzke, Ken 4248 Odell | | 1.00 |
| Sales Rece... | 07/31/2019 | B19-128 | 100 Gen'l Fd:A. Rev:A05 Lic, Fees & Permits:4400 Afton Bldg ... | Afton Surcharges | Afton Bldg Insp Fees:Morehead, Mike & Barbara 1940 Q | | 24.00 |
| Sales Rece... | 07/31/2019 | B19-124 | 100 Gen'l Fd:A. Rev:A05 Lic, Fees & Permits:4400 Afton Bldg ... | Afton Surcharges | Afton Bldg Insp Fees:Dahl, Kathy 16100 45th St S | | 18.50 |
| Sales Rece... | 07/31/2019 | B19-110 | 100 Gen'l Fd:A. Rev:A05 Lic, Fees & Permits:4400 Afton Bldg ... | Afton Surcharges | Afton Bldg Insp Fees:Stagg, Leann 15851 Afton Hills | | 10.00 |
| Sales Rece... | 07/31/2019 | B19-133 | 100 Gen'l Fd:A. Rev:A05 Lic, Fees & Permits:4400 Afton Bldg ... | Afton Surcharges | Afton Bldg Insp Fees:Sorenson, Lyle 15707 Aft Hills | | 7.50 |
| Sales Rece... | 07/31/2019 | B19-132 | 100 Gen'l Fd:A. Rev:A05 Lic, Fees & Permits:4400 Afton Bldg ... | Afton Surcharges | Afton Bldg Insp Fees:Cooper, Matt 3904 River Rd S | | 1.00 |
| Sales Rece... | 07/31/2019 | B19-131 | 100 Gen'l Fd:A. Rev:A05 Lic, Fees & Permits:4400 Afton Bldg ... | Afton Surcharges | Afton Bldg Insp Fees:Lambert, Mary 1980 Neal Av S | | 1.00 |
| Sales Rece... | 07/31/2019 | B19-123 | 100 Gen'l Fd:A. Rev:A05 Lic, Fees & Permits:4400 Afton Bldg ... | Afton Surcharges | Afton Bldg Insp Fees:Custom One Homes 2771 Nybeck Av | | 1.00 |
| Sales Rece... | 07/31/2019 | B19-126 | 100 Gen'l Fd:A. Rev:A05 Lic, Fees & Permits:4400 Afton Bldg ... | Afton Surcharges | Afton Bldg Insp Fees:Lindquist, Lonny 12390 8th St C | | 1.00 |
| Sales Rece... | 07/31/2019 | B19-127 | 100 Gen'l Fd:A. Rev:A05 Lic, Fees & Permits:4400 Afton Bldg ... | Afton Surcharges | Afton Bldg Insp Fees:Tix, Katy 13720 34th St S | | 1.00 |
| Sales Rece... | 07/31/2019 | B19-129 | 100 Gen'l Fd:A. Rev:A05 Lic, Fees & Permits:4400 Afton Bldg ... | Afton Surcharges | Afton Bldg Insp Fees:Yurek, Leo 4723 River Rd | | 1.00 |
| Sales Rece... | 07/31/2019 | B19-130 | 100 Gen'l Fd:A. Rev:A05 Lic, Fees & Permits:4400 Afton Bldg ... | Afton Surcharges | Afton Bldg Insp Fees:Anderson, Scott 3190 Perrot Av | | 1.00 |
| Sales Rece... | 07/31/2019 | B19-120 | 100 Gen'l Fd:A. Rev:A05 Lic, Fees & Permits:4400 Afton Bldg ... | Afton Surcharges | Afton Bldg Insp Fees:Stagg, Leann 15851 Afton Hills | | 1.00 |
| Sales Rece... | 07/31/2019 | B19-134 | 100 Gen'l Fd:A. Rev:A05 Lic, Fees & Permits:4400 Afton Bldg ... | Afton Surcharges | Afton Bldg Insp Fees:Johnson, Ken 3752 River Rd S | | 1.00 |
| Total 2121 · Afton Bldg Surcharges Payable | | | | | | 0.00 | 1,056.50 |
| Total 2120 · Building Surcharges Payable | | | | | | 0.00 | 1,056.50 |
| **4023 · Fees Sanitary Sewer Oper** | | | | | | | |
| Deposit | 07/02/2019 | 44516 | 410 Sanitary Sewer Utility:A. Rev:4023 Sanitary Sewer Oper - ... | Afton St Croix | | | 1,750.00 |
| Deposit | 07/02/2019 | 5618 | 410 Sanitary Sewer Utility:A. Rev:4023 Sanitary Sewer Oper - ... | Jessica Mulle | | | 100.00 |
| Deposit | 07/02/2019 | 5198 | 410 Sanitary Sewer Utility:A. Rev:4023 Sanitary Sewer Oper - ... | Ronald Raedeke and Susan Loomis | | | 35.00 |
| Deposit | 07/02/2019 | 13863 | 410 Sanitary Sewer Utility:A. Rev:4023 Sanitary Sewer Oper - ... | Donald and Vicki Bulger | | | 35.00 |
| Deposit | 07/09/2019 | 1368 | 410 Sanitary Sewer Utility:A. Rev:4023 Sanitary Sewer Oper - ... | Lone Star on St Croix | | | 200.00 |
| Deposit | 07/09/2019 | 13895 | 410 Sanitary Sewer Utility:A. Rev:4023 Sanitary Sewer Oper - ... | Donald and Vicki Bulger | | | 35.00 |
| Deposit | 07/09/2019 | 6634 | 410 Sanitary Sewer Utility:A. Rev:4023 Sanitary Sewer Oper - ... | Bill Palmquist | | | 50.00 |
| Deposit | 07/09/2019 | 5625 | 410 Sanitary Sewer Utility:A. Rev:4023 Sanitary Sewer Oper - ... | Mary McLaurin and Julie Marcus | | | 35.00 |
| Deposit | 07/09/2019 | 1121 | 410 Sanitary Sewer Utility:A. Rev:4023 Sanitary Sewer Oper - ... | Kevin and Kirsten Langstraat | | | 35.00 |
| Deposit | 07/09/2019 | 3616 | 410 Sanitary Sewer Utility:A. Rev:4023 Sanitary Sewer Oper - ... | Thorn Butler | | | 100.00 |
| Deposit | 07/09/2019 | 10306 | 410 Sanitary Sewer Utility:A. Rev:4023 Sanitary Sewer Oper - ... | Matt and Kristy Cooper | | | 35.00 |
| Deposit | 07/31/2019 | 18322 | 410 Sanitary Sewer Utility:A. Rev:4023 Sanitary Sewer Oper - ... | Roger Larsen | | | 50.00 |
| Deposit | 07/31/2019 | 2123 | 410 Sanitary Sewer Utility:A. Rev:4023 Sanitary Sewer Oper - ... | Kristin Durkopp | | | 35.00 |
| Deposit | 07/31/2019 | 12139 | 410 Sanitary Sewer Utility:A. Rev:4023 Sanitary Sewer Oper - ... | Hubert and Helen Schneider | | | 35.00 |
| Deposit | 07/31/2019 | 995130 | 410 Sanitary Sewer Utility:A. Rev:4023 Sanitary Sewer Oper - ... | John Thompson and Diane Benike | | | 50.00 |
| Deposit | 07/31/2019 | 3503 | 410 Sanitary Sewer Utility:A. Rev:4023 Sanitary Sewer Oper - ... | Paul and Rebecca Nickerson | | | 300.00 |
| Deposit | 07/31/2019 | 1373 | 410 Sanitary Sewer Utility:A. Rev:4023 Sanitary Sewer Oper - ... | Lone Star on the St Croix | | | 200.00 |
| Deposit | 07/31/2019 | 5612 | 410 Sanitary Sewer Utility:A. Rev:4023 Sanitary Sewer Oper - ... | Scott Anderson | | | 100.00 |
| Deposit | 07/31/2019 | 44583 | 410 Sanitary Sewer Utility:A. Rev:4023 Sanitary Sewer Oper - ... | Afton St Croix | | | 1,750.00 |
| Deposit | 07/31/2019 | 11891 | 410 Sanitary Sewer Utility:A. Rev:4023 Sanitary Sewer Oper - ... | Louis and Linda Tilton | | | 140.00 |
| Deposit | 07/31/2019 | 6732 | 410 Sanitary Sewer Utility:A. Rev:4023 Sanitary Sewer Oper - ... | Thomas and Kathryn Gasser | | | 35.00 |
| Deposit | 07/31/2019 | 6728 | 410 Sanitary Sewer Utility:A. Rev:4023 Sanitary Sewer Oper - ... | Thomas and Kathryn Gasser | | | 35.00 |
| Total 4023 · Fees Sanitary Sewer Oper | | | | | | 0.00 | 5,140.00 |
| **4112 · PERA Aid** | | | | | | | |
| Deposit | 07/18/2019 | 7042060 | 100 Gen'l Fd:A. Rev:A02 Intergovernmental Revenue:4112 PE... | 2nd Half 2019 PERA Aid | | | 317.00 |
| Total 4112 · PERA Aid | | | | | | 0.00 | 317.00 |
| **4300 · County Fines & Fees** | | | | | | | |
| Deposit | 07/12/2019 | 8200911693 | 100 Gen'l Fd:A. Rev:A04 Fines & Forfeitures:4300 Cty Fines &... | MN Dept of Finance: Wash Cty Fines and Fees Jun19 | | | 1,104.27 |
| Total 4300 · County Fines & Fees | | | | | | 0.00 | 1,104.27 |
| **4400 · Afton Bldg Inspection Fees** | | | | | | | |
| Sales Rece... | 07/02/2019 | B19-106 | 100 Gen'l Fd:A. Rev:A05 Lic, Fees & Permits:4400 Afton Bldg ... | Afton Building Permit Fees | Afton Bldg Insp Fees:Hase, Erin 12390 8th St Ct | | 330.00 |
| Sales Rece... | 07/02/2019 | B19-105 | 100 Gen'l Fd:A. Rev:A05 Lic, Fees & Permits:4400 Afton Bldg ... | Afton Building Permit Fees | Afton Bldg Insp Fees:Bursack, Chris & Winte, Heidi 2 | | 9,570.00 |
| Sales Rece... | 07/02/2019 | B19-104 | 100 Gen'l Fd:A. Rev:A05 Lic, Fees & Permits:4400 Afton Bldg ... | Afton Building Permit Fees | Afton Bldg Insp Fees:Nichols, Dale 15685 St Crx Trl | | 109.00 |
| Sales Rece... | 07/02/2019 | B19-107 | 100 Gen'l Fd:A. Rev:A05 Lic, Fees & Permits:4400 Afton Bldg ... | Afton Building Permit Fees | Afton Bldg Insp Fees:Windmill Marina 16052 32nd St | | 445.50 |
| Sales Rece... | 07/02/2019 | B19-103 | 100 Gen'l Fd:A. Rev:A05 Lic, Fees & Permits:4400 Afton Bldg ... | Afton Building Permit Fees | Afton Bldg Insp Fees:Knuth, Steve & Jennifer 2249 Ne | | 15,840.00 |
| Sales Rece... | 07/02/2019 | B19-97 | 100 Gen'l Fd:A. Rev:A05 Lic, Fees & Permits:4400 Afton Bldg ... | Afton Building Permit Fees | Afton Bldg Insp Fees:Sanford, Martha 762 Stagecoach | | 1,080.00 |
| Sales Rece... | 07/02/2019 | B19-99 | 100 Gen'l Fd:A. Rev:A05 Lic, Fees & Permits:4400 Afton Bldg ... | Afton Building Permit Fees | Afton Bldg Insp Fees:Hartman, Todd 15081 50th St | | 1,320.00 |
| Sales Rece... | 07/02/2019 | B19-100 | 100 Gen'l Fd:A. Rev:A05 Lic, Fees & Permits:4400 Afton Bldg ... | Afton Building Permit Fees | Afton Bldg Insp Fees:Hlavacek, Doug 1010 Stagecoach | | 109.00 |
| Sales Rece... | 07/02/2019 | B19-101 | 100 Gen'l Fd:A. Rev:A05 Lic, Fees & Permits:4400 Afton Bldg ... | Afton Building Permit Fees | Afton Bldg Insp Fees:Kopitzke, Ken 4248 Odell | | 247.50 |



R2

# City of Afton
## Customer Receipts and Other Deposits - Sorted by Account
### July 2019

| Type | Date | Num | Name | Memo | Class | Debit | Credit |
|---|---|---|---|---|---|---|---|
| Sales Rece... | 07/02/2019 | B19-108 | 100 Gen'l Fd:A. Rev:A05 Lic, Fees & Permits:4400 Afton Bldg ... | Afton Building Permit Fees | Afton Bldg Insp Fees:Santore, David 13901 Tomahawk | | 109.00 |
| Sales Rece... | 07/02/2019 | B19-102 | 100 Gen'l Fd:A. Rev:A05 Lic, Fees & Permits:4400 Afton Bldg ... | Afton Building Permit Fees | Afton Bldg Insp Fees:Knuth, Steve & Jennifer 2249 Ne | | 660.00 |
| Sales Rece... | 07/02/2019 | B19-98 | 100 Gen'l Fd:A. Rev:A05 Lic, Fees & Permits:4400 Afton Bldg ... | Afton Building Permit Fees | Afton Bldg Insp Fees:Doherty, Sally 13575 40th St S | | 54.00 |
| Sales Rece... | 07/31/2019 | B19-114 | 100 Gen'l Fd:A. Rev:A05 Lic, Fees & Permits:4400 Afton Bldg ... | Afton Building Permit Fees | Afton Bldg Insp Fees:Kassenborg, Heidi 14141 44th St | | 231.00 |
| Sales Rece... | 07/31/2019 | B19-111 | 100 Gen'l Fd:A. Rev:A05 Lic, Fees & Permits:4400 Afton Bldg ... | Afton Building Permit Fees | Afton Bldg Insp Fees:Stagg, Leann 15851 Afton Hills | | 445.50 |
| Sales Rece... | 07/31/2019 | B19-109 | 100 Gen'l Fd:A. Rev:A05 Lic, Fees & Permits:4400 Afton Bldg ... | Afton Building Permit Fees | Afton Bldg Insp Fees:Narducci, Gary 3475 Neal Av | | 109.00 |
| Sales Rece... | 07/31/2019 | B19-112 | 100 Gen'l Fd:A. Rev:A05 Lic, Fees & Permits:4400 Afton Bldg ... | Afton Building Permit Fees | Afton Bldg Insp Fees:Coulter, Amy 14460 15th St Circ | | 330.00 |
| Sales Rece... | 07/31/2019 | B19-113 | 100 Gen'l Fd:A. Rev:A05 Lic, Fees & Permits:4400 Afton Bldg ... | Afton Building Permit Fees | Afton Bldg Insp Fees:McGinn, Kate 250 Indian Trl | | 109.00 |
| Sales Rece... | 07/31/2019 | B19-135 | 100 Gen'l Fd:A. Rev:A05 Lic, Fees & Permits:4400 Afton Bldg ... | Afton Building Permit Fees | Afton Bldg Insp Fees:Frost, George 1395 Neal Av | | 495.00 |
| Sales Rece... | 07/31/2019 | B19-121 | 100 Gen'l Fd:A. Rev:A05 Lic, Fees & Permits:4400 Afton Bldg ... | Afton Building Permit Fees | Afton Bldg Insp Fees:Fesler, Nancy 4627 River Rd S | | 109.00 |
| Sales Rece... | 07/31/2019 | B19-118 | 100 Gen'l Fd:A. Rev:A05 Lic, Fees & Permits:4400 Afton Bldg ... | Afton Building Permit Fees | Afton Bldg Insp Fees:Kunz, Cathy Ganz 12694 50th St | | 109.00 |
| Sales Rece... | 07/31/2019 | B19-115 | 100 Gen'l Fd:A. Rev:A05 Lic, Fees & Permits:4400 Afton Bldg ... | Afton Building Permit Fees | Afton Bldg Insp Fees:McGinn, Kate 250 Indian Trl | | 109.00 |
| Sales Rece... | 07/31/2019 | B19-117 | 100 Gen'l Fd:A. Rev:A05 Lic, Fees & Permits:4400 Afton Bldg ... | Afton Building Permit Fees | Afton Bldg Insp Fees:Arends, Debbie 14682 Aft Blvd S | | 109.00 |
| Sales Rece... | 07/31/2019 | B19-122 | 100 Gen'l Fd:A. Rev:A05 Lic, Fees & Permits:4400 Afton Bldg ... | Afton Building Permit Fees | Afton Bldg Insp Fees:Hulton, John 15220 Aft Hills Dr | | 647.00 |
| Sales Rece... | 07/31/2019 | B19-19 | 100 Gen'l Fd:A. Rev:A05 Lic, Fees & Permits:4400 Afton Bldg ... | Afton Building Permit Fees | Afton Bldg Insp Fees:Truman, Jen 1674 Quant Av S | | 462.00 |
| Sales Rece... | 07/31/2019 | B19-125 | 100 Gen'l Fd:A. Rev:A05 Lic, Fees & Permits:4400 Afton Bldg ... | Afton Building Permit Fees | Afton Bldg Insp Fees:Kopitzke, Ken 4248 Odell | | 109.00 |
| Sales Rece... | 07/31/2019 | B19-128 | 100 Gen'l Fd:A. Rev:A05 Lic, Fees & Permits:4400 Afton Bldg ... | Afton Building Permit Fees | Afton Bldg Insp Fees:Morehead, Mike & Barbara 1940 Q | | 792.00 |
| Sales Rece... | 07/31/2019 | B19-124 | 100 Gen'l Fd:A. Rev:A05 Lic, Fees & Permits:4400 Afton Bldg ... | Afton Building Permit Fees | Afton Bldg Insp Fees:Dahl, Kathy 16100 45th St S | | 610.50 |
| Sales Rece... | 07/31/2019 | B19-110 | 100 Gen'l Fd:A. Rev:A05 Lic, Fees & Permits:4400 Afton Bldg ... | Afton Building Permit Fees | Afton Bldg Insp Fees:Stagg, Leann 15851 Afton Hills | | 330.00 |
| Sales Rece... | 07/31/2019 | B19-133 | 100 Gen'l Fd:A. Rev:A05 Lic, Fees & Permits:4400 Afton Bldg ... | Afton Building Permit Fees | Afton Bldg Insp Fees:Sorenson, Lyle 15707 Aft Hills | | 247.50 |
| Sales Rece... | 07/31/2019 | B19-132 | 100 Gen'l Fd:A. Rev:A05 Lic, Fees & Permits:4400 Afton Bldg ... | Afton Building Permit Fees | Afton Bldg Insp Fees:Cooper, Matt 3904 River Rd S | | 109.00 |
| Sales Rece... | 07/31/2019 | B19-131 | 100 Gen'l Fd:A. Rev:A05 Lic, Fees & Permits:4400 Afton Bldg ... | Afton Building Permit Fees | Afton Bldg Insp Fees:Lambert, Mary 1980 Neal Av S | | 109.00 |
| Sales Rece... | 07/31/2019 | B19-123 | 100 Gen'l Fd:A. Rev:A05 Lic, Fees & Permits:4400 Afton Bldg ... | Afton Building Permit Fees | Afton Bldg Insp Fees:Custom One Homes 2771 Nybeck Av | | 109.00 |
| Sales Rece... | 07/31/2019 | B19-126 | 100 Gen'l Fd:A. Rev:A05 Lic, Fees & Permits:4400 Afton Bldg ... | Afton Building Permit Fees | Afton Bldg Insp Fees:Lindquist, Lonny 12390 8th St C | | 109.00 |
| Sales Rece... | 07/31/2019 | B19-127 | 100 Gen'l Fd:A. Rev:A05 Lic, Fees & Permits:4400 Afton Bldg ... | Afton Building Permit Fees | Afton Bldg Insp Fees:Tix, Katy 13720 34th St S | | 55.00 |
| Sales Rece... | 07/31/2019 | B19-129 | 100 Gen'l Fd:A. Rev:A05 Lic, Fees & Permits:4400 Afton Bldg ... | Afton Building Permit Fees | Afton Bldg Insp Fees:Yurek, Leo 4723 River Rd | | 109.00 |
| Sales Rece... | 07/31/2019 | B19-130 | 100 Gen'l Fd:A. Rev:A05 Lic, Fees & Permits:4400 Afton Bldg ... | Afton Building Permit Fees | Afton Bldg Insp Fees:Anderson, Scott 3190 Perrot Av | | 54.00 |
| Sales Rece... | 07/31/2019 | B19-120 | 100 Gen'l Fd:A. Rev:A05 Lic, Fees & Permits:4400 Afton Bldg ... | Afton Building Permit Fees | Afton Bldg Insp Fees:Stagg, Leann 15851 Afton Hills | | 109.00 |
| Sales Rece... | 07/31/2019 | B19-134 | 100 Gen'l Fd:A. Rev:A05 Lic, Fees & Permits:4400 Afton Bldg ... | Afton Building Permit Fees | Afton Bldg Insp Fees:Johnson, Ken 3752 River Rd S | | 109.00 |
| Total 4400 · Afton Bldg Inspection Fees | | | | | | 0.00 | 36,099.50 |
| **4405 · Pet License & Impound Fees** | | | | | | | |
| Deposit | 07/02/2019 | 1121 | 100 Gen'l Fd:A. Rev:A05 Lic, Fees & Permits:4405 Pet License... | Jeff and Carissa Bauer | | | 30.00 |
| Deposit | 07/31/2019 | 1684 | 100 Gen'l Fd:A. Rev:A05 Lic, Fees & Permits:4405 Pet License... | Mindy Stewart | | | 10.00 |
| Total 4405 · Pet License & Impound Fees | | | | | | 0.00 | 40.00 |
| **4415 · Other License Fees** | | | | | | | |
| Deposit | 07/09/2019 | 819 | 100 Gen'l Fd:A. Rev:A05 Lic, Fees & Permits:4415 Other Lice... | Rove Pest Control: Solicitor License | | | 50.00 |
| Total 4415 · Other License Fees | | | | | | 0.00 | 50.00 |
| **4425 · Park & Open Space Dedicatn Fees** | | | | | | | |
| Deposit | 07/31/2019 | 5390 1456 | 200 Park Reserve Fd:A. Rev:4425 Park Dedication Fees | Kerry and Judy White: Park Dedication Fee Res 2019-29 | | | 10,000.00 |
| Total 4425 · Park & Open Space Dedicatn Fees | | | | | | 0.00 | 10,000.00 |
| **4435 · Street Openng & Utility Permits** | | | | | | | |
| Deposit | 07/02/2019 | 338207 | 100 Gen'l Fd:A. Rev:A05 Lic, Fees & Permits:4435 Street Ope... | Telcom Construction for Century Link 12234 Meadow Bluff Trl | | | 200.00 |
| Deposit | 07/09/2019 | 11109014 | 100 Gen'l Fd:A. Rev:A05 Lic, Fees & Permits:4435 Street Ope... | Qwest Corp: Utility Permit | | | 250.00 |
| Deposit | 07/31/2019 | 338406 | 100 Gen'l Fd:A. Rev:A05 Lic, Fees & Permits:4435 Street Ope... | Telcom Comm: 12234 Meadow Bluff Trl | | | 50.00 |
| Total 4435 · Street Openng & Utility Permits | | | | | | 0.00 | 500.00 |
| **4437 · Utility Franchise Fees** | | | | | | | |
| Deposit | 07/31/2019 | 1555395 | 100 Gen'l Fd:A. Rev:A05 Lic, Fees & Permits:4437 Utility Fran... | Centerpoint 2nd Qtr 2019 | | | 6,997.00 |
| Total 4437 · Utility Franchise Fees | | | | | | 0.00 | 6,997.00 |
| **4604 · Park Rental Fees** | | | | | | | |
| Deposit | 07/31/2019 | 6358 | 100 Gen'l Fd:A. Rev:A07 Miscellaneous Revenue:4604 Park Re... | Michelle Odden 7/27/19 | | | 100.00 |
| Total 4604 · Park Rental Fees | | | | | | 0.00 | 100.00 |
| **4810 · County Recycling Grant** | | | | | | | |
| Deposit | 07/23/2019 | PHE071619 | 100 Gen'l Fd:A. Rev:A09 Other Grants:4810 County Recycling ... | Wash Cty recycling Grant 2019 | | | 6,675.50 |



R3

# City of Afton
## Customer Receipts and Other Deposits - Sorted by Account
### July 2019

| Type | Date | Num | Name | Memo | Class | Debit | Credit |
|---|---|---|---|---|---|---|---|
| Total 4810 · County Recycling Grant | | | | | | 0.00 | 6,675.50 |
| **4950 · 10% Charitable Gaming Tax** | | | | | | | |
| Deposit | 07/02/2019 | 12850 | 550 Special Activities Fd - General:E. Charitable Gaming Tax:4... | Merrick May 2019: Lumberyard Pub | | | 28.00 |
| Total 4950 · 10% Charitable Gaming Tax | | | | | | 0.00 | 28.00 |
| **5525 · Ins - General Liability** | | | | | | | |
| Deposit | 07/09/2019 | 23305 | 100 Gen'l Fd:B. Exp:B01 G & A:B1.4 Oth Exp:5525 Ins - Gen'l... | LMCIT Refund (ins pd twice) | | | 1,595.00 |
| Total 5525 · Ins - General Liability | | | | | | 0.00 | 1,595.00 |
| **5705 · Recycling - Afton** | | | | | | | |
| Deposit | 07/02/2019 | 617170 | 100 Gen'l Fd:B. Exp:B02 Public Safety & Health:B2.2 Public H... | Northern Metal Recycling | | | 327.25 |
| Total 5705 · Recycling - Afton | | | | | | 0.00 | 327.25 |
| **6060 · Sanitary Sewer Expenses** | | | | | | | |
| **6069 · Insurance - Sanitary Sewer** | | | | | | | |
| Deposit | 07/09/2019 | 23305 | 410 Sanitary Sewer Utility:B. Exp:6060 Sanitary Sewer Oper - ... | LMCIT Refund (ins pd twice) | | | 909.00 |
| Total 6069 · Insurance - Sanitary Sewer | | | | | | 0.00 | 909.00 |
| Total 6060 · Sanitary Sewer Expenses | | | | | | 0.00 | 909.00 |
| **6366 · City Council Contingency Exp** | | | | | | | |
| Deposit | 07/31/2019 | 177420 | 550 Special Activities Fd - General:B. Cable Comm/July 4th/Co... | LMC City of Excellence Award | | | 1,000.00 |
| Total 6366 · City Council Contingency Exp | | | | | | 0.00 | 1,000.00 |
| **TOTAL** | | | | | | **82,391.42** | **82,391.42** |

R4

# City of Afton
## Building Inspection Fees by Account - Detail Afton
### January through July 2019

| Date | Num | Valuation/Memo | Class | Class | Amount |
|---|---|---|---|---|---|
| **Jan 19** | | | | | |
| 01/22/2019 | B19-02 | na | mech | Afton Bldg Insp Fees:Weed, katherine & George 15895 | 109.00 |
| 01/22/2019 | B19-03 | na | mech | Afton Bldg Insp Fees:Morri, Jake & Jenn 1073 Indian | 109.00 |
| 01/22/2019 | B19-01 | $14,500 | Plumb | Afton Bldg Insp Fees:Lang Builders 1073 Indian Trl P | 247.50 |
| 01/22/2019 | B18-207 | $19,637 | mech | Afton Bldg Insp Fees:Wipperfurth, Casandra & Joel 43 | 330.00 |
| 01/24/2019 | B19-05 | na | mech | Afton Bldg Insp Fees:Bibritsch Family Trust 15677 Af | 109.00 |
| 01/24/2019 | B19-04 | $90,000 | Garage | Afton Bldg Insp Fees:Bailey, Steve 14701 42nd St S | 1,485.00 |
| Jan 19 | | | | | 2,389.50 |
| **Feb 19** | | | | | |
| 02/28/2019 | B19-16 | na | bldg | Afton Bldg Insp Fees:Stransky, Jerome 14220 15th St | 109.00 |
| 02/28/2019 | B19-17 | na | bldg | Afton Bldg Insp Fees:Agen, Jeff & Jennifer 1023 Indi | 109.00 |
| 02/28/2019 | B19-12 | $18,000 | bldg | Afton Bldg Insp Fees:Larson, Trevor & Greta 989 Indi | 297.00 |
| 02/28/2019 | B19-10 | $250,000 | SFD | Afton Bldg Insp Fees:Distinctive 12234 Meadow Bluff | 4,950.00 |
| 02/28/2019 | B19-08 | $690,000 | SFD | Afton Bldg Insp Fees:Wandschneider, ToddSarah 15356 | 11,385.00 |
| 02/28/2019 | B19-20 | na | bldg | Afton Bldg Insp Fees:Anderson, Paul; 14935 45th St S | 109.00 |
| 02/28/2019 | B19-06 | na | mech | Afton Bldg Insp Fees:Sales, Greg 15196 Aft Hills Dr | 109.00 |
| 02/28/2019 | B19-07 | na | mech | Afton Bldg Insp Fees:Hager, Dean 2903 Nybeck Av S | 109.00 |
| 02/28/2019 | B19-14 | na | mech | Afton Bldg Insp Fees:Lang Builders 1073 Indian Trl P | 109.00 |
| 02/28/2019 | B19-13 | na | mech | Afton Bldg Insp Fees:Lang Builders 1073 Indian Trl P | 109.00 |
| 02/28/2019 | B19-15 | na | mech | Afton Bldg Insp Fees:Inspiri Design 16100 45th St | 54.00 |
| 02/28/2019 | B19-18 | na | mech | Afton Bldg Insp Fees:Boomer, George 615 Indian Tr S | 109.00 |
| 02/28/2019 | B19-19 | na | mech | Afton Bldg Insp Fees:Corcoran, William 13404 15th St | 109.00 |
| Feb 19 | | | | | 17,667.00 |
| **Mar 19** | | | | | |
| 03/25/2019 | B19-32 | na | Remodel | Afton Bldg Insp Fees:Peine, Mark 571 Neal Av S | 109.00 |
| 03/25/2019 | B19-30 | $105,000 | Remodel | Afton Bldg Insp Fees:Morris, John 3250 Pennington Av | 1,732.50 |
| 03/25/2019 | B19-28 | $25,200 | Garage | Afton Bldg Insp Fees:Niswanger 2770 Trading Pst Trl | 412.50 |
| 03/25/2019 | B19-26 | na | windows, door | Afton Bldg Insp Fees:Denny, John 14505 50th St S | 109.00 |
| 03/25/2019 | B19-25 | na | bldg | Afton Bldg Insp Fees:Wade, James & Marj 13506 Vly Cr | 109.00 |
| 03/25/2019 | B19-22 | na | bldg | Afton Bldg Insp Fees:McDowell, Erin 15601 36th St S | 109.00 |
| 03/25/2019 | B19-31 | na | mech | Afton Bldg Insp Fees:Leasure, Mark & Scaramuzzp, Tin | 54.00 |
| 03/25/2019 | B19-27 | na | mech | Afton Bldg Insp Fees:Hinz, Tom 4787 Manning Av S | 109.00 |
| 03/25/2019 | B19-21 | na | mech | Afton Bldg Insp Fees:Afton Hist Mus 3165 St Cr Trl S | 109.00 |
| 03/25/2019 | B19-29 | na | plumb | Afton Bldg Insp Fees:Lantz, Fontaine 1801 Manning Av | 109.00 |
| 03/25/2019 | B19-23 | na | plumb | Afton Bldg Insp Fees:Bibritsch Family Trust 15677 Af | 109.00 |
| Mar 19 | | | | | 3,071.00 |
| **Apr 19** | | | | | |
| 04/17/2019 | B19-53 | na | bldg | Afton Bldg Insp Fees:Jordan, Jim 15120 42nd St | 109.00 |
| 04/17/2019 | B19-51 | na | bldg | Afton Bldg Insp Fees:O'Gorman, Frank 2451 Stagecoach | 109.00 |
| 04/17/2019 | B19-52 | na | bldg | Afton Bldg Insp Fees:Wilcox, Linda 5628 Trading Pst | 109.00 |
| 04/17/2019 | B19-48 | na | bldg | Afton Bldg Insp Fees:Anderson, Gary 623 Neal Av S | 109.00 |
| 04/17/2019 | B19-49 | $500,000 | New SFD | Afton Bldg Insp Fees:Amaris Homes 2158 Oakgreen Av S | 8,250.00 |
| 04/17/2019 | B19-24 | 422,000 | new SFD | Afton Bldg Insp Fees:Coulter, Amy 14460 15th St Circ | 6,963.00 |



S1

# City of Afton
## Building Inspection Fees by Account - Detail Afton
### January through July 2019

| Date | Num | Valuation/Memo | Class | Class | Amount |
|---|---|---|---|---|---|
| 04/17/2019 | B19-40 | na | bldg | Afton Bldg Insp Fees:Masiowski, Mike 13695 Tomahalk | 109.00 |
| 04/17/2019 | B19-39 | $200,000 | Remodel | Afton Bldg Insp Fees:Cook, Vega & Eric 3787 St Crx T | 3,300.00 |
| 04/17/2019 | B19-37 | na | bldg | Afton Bldg Insp Fees:Husebye, David 5830 Osgood | 109.00 |
| 04/17/2019 | B19-35 | na | bldg | Afton Bldg Insp Fees:Hartigan, Michael 14480 32nd St | 109.00 |
| 04/17/2019 | B19-36 | na | bldg | Afton Bldg Insp Fees:Haskins, Sally 4500 River Rd S | 109.00 |
| 04/17/2019 | B19-47 | $13,634 | mech | Afton Bldg Insp Fees:Distinctive 12234 Meadow Bluff | 231.00 |
| 04/17/2019 | B19-46 | $18,852 | mech | Afton Bldg Insp Fees:Winters-Bursack 2771 Nybeck Av | 313.50 |
| 04/17/2019 | B19-44 | $23,475 | mech | Afton Bldg Insp Fees:Wandschneider, ToddSarah 15356 | 396.00 |
| 04/17/2019 | B19-45 | $25,291 | mech | Afton Bldg Insp Fees:Wandschneider, ToddSarah 15356 | 429.00 |
| 04/17/2019 | B19-43 | na | mech | Afton Bldg Insp Fees:Larson, Greta 989 Indian Trl S | 109.00 |
| 04/17/2019 | B19-41 | na | mech | Afton Bldg Insp Fees:Lantz, Fontaine 1801 Manning Av | 109.00 |
| 04/17/2019 | B19-33 | na | mech | Afton Bldg Insp Fees:Whittall, Nicholas & Meredith 1 | 109.00 |
| 04/17/2019 | B19-34 | na | mech | Afton Bldg Insp Fees:Christenson, Tom 1688 Strawberr | 109.00 |
| 04/17/2019 | B19-38 | na | mech | Afton Bldg Insp Fees:Morris, John 3250 Pennington Av | 109.00 |
| 04/17/2019 | B19-54 | na | plumb | Afton Bldg Insp Fees:Boomer, George 615 Indian Tr S | 54.00 |
| 04/17/2019 | B19-42 | $10,000 | plumb | Afton Bldg Insp Fees:Anel, Jon 12234 Meadow Bluff Tr | 198.00 |
| 04/17/2019 | B19-50 | na | plumb | Afton Bldg Insp Fees:Snelling, Matt 3465 St Crx Trl | 109.00 |
| 04/23/2019 | B19-55 | na | plumb | Afton Bldg Insp Fees:Boisjoli 15489 45th St S | 109.00 |
| 04/23/2019 | B19-57 | na | mech | Afton Bldg Insp Fees:Morris, John 3250 Pennington Av | 109.00 |
| 04/23/2019 | B19-56 | na | mech | Afton Bldg Insp Fees:Aronson, Steve 15248 Afton Hill | 109.00 |
| 04/30/2019 | B19-58 | $113,069 | pole bldg | Afton Bldg Insp Fees:Narducci, Gary 3475 Neal Av | 825.00 |
| 04/30/2019 | B19-62 | $13,250 | reroof | Afton Bldg Insp Fees:Williams, Elise 5515 Osgood Av | 109.00 |
| 04/30/2019 | B19-61 | $21,829 | windows | Afton Bldg Insp Fees:Amaral, Jim 5380 O'Dell Av | 109.00 |
| 04/30/2019 | B19-60 | $6,000 | remodel | Afton Bldg Insp Fees:Haukland, Roger 5333 Manning Av | 109.00 |
| 04/30/2019 | B19-59 | na | mech | Afton Bldg Insp Fees:Osborn, Jay 3850 Oak Green Av S | 109.00 |
| 04/30/2019 | B19-63 | na | deck | Afton Bldg Insp Fees:Ostertag, Darin & Nicole 12070 | 109.00 |
| 04/30/2019 | B19-65 | $5,910 | bldg | Afton Bldg Insp Fees:McDowell, Erin 15601 36th St S | 109.00 |
| 04/30/2019 | B19-64 | $5,217 | Bldg | Afton Bldg Insp Fees:Wurzer, Cathy 15677 Afton Blvd | 109.00 |
| 04/30/2019 | B19-66 | $10,780 | reroof | Afton Bldg Insp Fees:Flicker, Tom 5665 Osgood Av S | 109.00 |
| 04/30/2019 | B19-68 | $9,676 | reroof | Afton Bldg Insp Fees:Novolony, Tony 13406 10th St S | 109.00 |
| 04/30/2019 | B19-67 | $86,500 | remodel | Afton Bldg Insp Fees:Osborn, Jay 3850 Oak Green Av S | 1,419.00 |
| 04/30/2019 | B19-69 | $50,000 | remodel | Afton Bldg Insp Fees:Staples, Thomas 14040 30th St S | 109.00 |
| 04/30/2019 | B19-72 | $4,270 | mech | Afton Bldg Insp Fees:Haglund, Dave 593 Neal Av S | 54.00 |
| 04/30/2019 | B19-71 | $25,675 | bldg | Afton Bldg Insp Fees:Canas, Jose 12701 2nd St S | 412.50 |
| 04/30/2019 | B19-70 | $15,000 | mech | Afton Bldg Insp Fees:Stiff, David 15577 42th St S | 109.00 |
| Apr 19 | | | | | 25,897.00 |
| **May 19** | | | | | |
| 05/28/2019 | B19-73 | $400 | HVAC | Afton Bldg Insp Fees:Kittel, Dave 13637 50th St S | 54.00 |
| 05/28/2019 | B19-75 | $14,000 | reroof | Afton Bldg Insp Fees:Boyum, John 2322 Trading Post T | 109.00 |
| 05/28/2019 | B19-76 | $9,000 | Deck | Afton Bldg Insp Fees:Wynne 3396 Neal Av S | 165.00 |
| 05/28/2019 | B19-78 | $13,000 | reroof | Afton Bldg Insp Fees:Boisjoli 15489 45th St S | 109.00 |
| 05/28/2019 | B19-79 | $50,000 | Pool | Afton Bldg Insp Fees:Agnessi, Mark 14255 East Oakgre | 109.00 |
| 05/28/2019 | B19-81 | $170,000 | addition | Afton Bldg Insp Fees:Johnson, Ken 3752 River Rd S | 2,805.00 |
| 05/28/2019 | B19-82 | $17,000 | remodel | Afton Bldg Insp Fees:Mohs, John 15339 Afton Hills Dr | 280.50 |
| 05/28/2019 | B19-84 | $400,000 | remodel, addition | Afton Bldg Insp Fees:Gasser, Tom 4220 River Rd S | 6,600.00 |
| 05/28/2019 | B19-74 | $3,100 | mech | Afton Bldg Insp Fees:Dorgan, Steve & Krista 4723 Par | 54.00 |



S2

# City of Afton
## Building Inspection Fees by Account - Detail Afton
### January through July 2019

| Date | Num | Valuation/Memo | Class | Class | Amount |
|---|---|---|---|---|---|
| 05/28/2019 | B19-86 | $1,000 | mech | Afton Bldg Insp Fees:Staples, Thomas 14040 30th St S | 109.00 |
| 05/28/2019 | B19-80 | $9,875 | plumb | Afton Bldg Insp Fees:Osborn, Jay 3850 Oak Green Av S | 165.00 |
| May 19 | | | | | 10,559.50 |
| **Jun 19** | | | | | |
| 06/17/2019 | B19-91 | $4,518 | bldg | Afton Bldg Insp Fees:Seebergert, Michael 135 Croixvi | 109.00 |
| 06/17/2019 | B19-87 | $19,000 | bldg | Afton Bldg Insp Fees:Kadrie, Julie 4390 Partridge Cr | 313.50 |
| 06/17/2019 | B19-88 | $4,000 | mech | Afton Bldg Insp Fees:Ross, John 4840 Pleasant Ct S | 54.00 |
| 06/17/2019 | B19-89 | $8,122 | mech | Afton Bldg Insp Fees:Redinger, David 4374 Partridge | 109.00 |
| 06/17/2019 | B19-90 | $16,000 | mech | Afton Bldg Insp Fees:Weilandt, Karl & Shannon 13663 | 109.00 |
| 06/17/2019 | B19-94 | $8,495 | mech | Afton Bldg Insp Fees:Gillman, Kathleen 3396 Neal Av | 54.00 |
| 06/17/2019 | B19-95 96 | $18,000 | mech | Afton Bldg Insp Fees:Amaris Homes 2158 Oakgreen Av S | 297.00 |
| 06/17/2019 | B19-92 | $15,000 | plumb | Afton Bldg Insp Fees:Pruban, Raymond 2158 Oakgreen A | 247.50 |
| 06/17/2019 | B19-93 | $500 | plumb | Afton Bldg Insp Fees:Stiff, David 15577 42th St S | 54.00 |
| Jun 19 | | | | | 1,347.00 |
| **Jul 19** | | | | | |
| 07/02/2019 | B19-106 | $21,350 | Bldg | Afton Bldg Insp Fees:Hase, Erin 12390 8th St Ct | 330.00 |
| 07/02/2019 | B19-105 | $576,861 | SFD | Afton Bldg Insp Fees:Bursack, Chris & Winte, Heidi 2 | 9,570.00 |
| 07/02/2019 | B19-104 | $8,000 | Bldg | Afton Bldg Insp Fees:Nichols, Dale 15685 St Crx Trl | 109.00 |
| 07/02/2019 | B19-107 | $27,155 | bldg | Afton Bldg Insp Fees:Windmill Marina 16052 32nd St | 445.50 |
| 07/02/2019 | B19-103 | $958,000 | SFD | Afton Bldg Insp Fees:Knuth, Steve & Jennifer 2249 Ne | 15,840.00 |
| 07/02/2019 | B19-97 | $80,000 | bldg | Afton Bldg Insp Fees:Sanford, Martha 762 Stagecoach | 1,080.00 |
| 07/02/2019 | B19-99 | $80,000 | bldg | Afton Bldg Insp Fees:Hartman, Todd 15081 50th St | 1,320.00 |
| 07/02/2019 | B19-100 | $12,000 | bldg | Afton Bldg Insp Fees:Hlavacek, Doug 1010 Stagecoach | 109.00 |
| 07/02/2019 | B19-101 | $15,200 | bldg | Afton Bldg Insp Fees:Kopitzke, Ken 4248 Odell | 247.50 |
| 07/02/2019 | B19-108 | $7,600 | mech | Afton Bldg Insp Fees:Santore, David 13901 Tomahawk | 109.00 |
| 07/02/2019 | B19-102 | $40,000 | plumb | Afton Bldg Insp Fees:Knuth, Steve & Jennifer 2249 Ne | 660.00 |
| 07/02/2019 | B19-98 | $2,236 | plumb | Afton Bldg Insp Fees:Doherty, Sally 13575 40th St S | 54.00 |
| 07/31/2019 | B19-114 | $13,750 | bldg | Afton Bldg Insp Fees:Kassenborg, Heidi 14141 44th St | 231.00 |
| 07/31/2019 | B19-111 | $27,200 | bldg | Afton Bldg Insp Fees:Stagg, Leann 15851 Afton Hills | 445.50 |
| 07/31/2019 | B19-109 | $10,000 | mech | Afton Bldg Insp Fees:Narducci, Gary 3475 Neal Av | 109.00 |
| 07/31/2019 | B19-112 | $19,875 | mech | Afton Bldg Insp Fees:Coulter, Amy 14460 15th St Circ | 330.00 |
| 07/31/2019 | B19-113 | $2,500 | plumb | Afton Bldg Insp Fees:McGinn, Kate 250 Indian Trl | 109.00 |
| 07/31/2019 | B19-135 | $30,000 | bldg | Afton Bldg Insp Fees:Frost, George 1395 Neal Av | 495.00 |
| 07/31/2019 | B19-121 | $3,631 | bldg | Afton Bldg Insp Fees:Fesier, Nancy 4627 River Rd S | 109.00 |
| 07/31/2019 | B19-118 | $6340 | bldg | Afton Bldg Insp Fees:Kunz, Cathy Ganz 12694 50th St | 109.00 |
| 07/31/2019 | B19-115 | $39,000 | bldg | Afton Bldg Insp Fees:McGinn, Kate 250 Indian Trl | 109.00 |
| 07/31/2019 | B19-117 | $6,984 | bldg | Afton Bldg Insp Fees:Arends, Debbie 14682 Aft Blvd S | 109.00 |
| 07/31/2019 | B19-122 | $39,000 | bldg | Afton Bldg Insp Fees:Hulton, John 15220 Aft Hills Dr | 647.00 |
| 07/31/2019 | B19-19 | $28,500 | bldg | Afton Bldg Insp Fees:Truman, Jen 1674 Quant Av S | 462.00 |
| 07/31/2019 | B19-125 | $29,848 | bldg | Afton Bldg Insp Fees:Kopitzke, Ken 4248 Odell | 109.00 |
| 07/31/2019 | B19-128 | $48,000 | bldg | Afton Bldg Insp Fees:Morehead, Mike & Barbara 1940 Q | 792.00 |
| 07/31/2019 | B19-124 | $36,700 | bldg | Afton Bldg Insp Fees:Dahl, Kathy 16100 45th St S | 610.50 |
| 07/31/2019 | B19-110 | $20,000 | bldg | Afton Bldg Insp Fees:Stagg, Leann 15851 Afton Hills | 330.00 |
| 07/31/2019 | B19-133 | $15,000 | bldg | Afton Bldg Insp Fees:Sorenson, Lyle 15707 Aft Hills | 247.50 |

# City of Afton
## Building Inspection Fees by Account - Detail Afton
### January through July 2019

| Date | Num | Valuation/Memo | Class | Class | Amount |
|---|---|---|---|---|---|
| 07/31/2019 | B19-132 | $5,468 | bldg | Afton Bldg Insp Fees:Cooper, Matt 3904 River Rd S | 109.00 |
| 07/31/2019 | B19-131 | $17,200 | bldg | Afton Bldg Insp Fees:Lambert, Mary 1980 Neal Av S | 109.00 |
| 07/31/2019 | B19-123 | $1,500 | mech | Afton Bldg Insp Fees:Custom One Homes 2771 Nybeck Av | 109.00 |
| 07/31/2019 | B19-126 | $2,000 | mech | Afton Bldg Insp Fees:Lindquist, Lonny 12390 8th St C | 109.00 |
| 07/31/2019 | B19-127 | $5,200 | mech | Afton Bldg Insp Fees:Tix, Katy 13720 34th St S | 55.00 |
| 07/31/2019 | B19-129 | $8,789 | mech | Afton Bldg Insp Fees:Yurek, Leo 4723 River Rd | 109.00 |
| 07/31/2019 | B19-130 | $500 | plumb | Afton Bldg Insp Fees:Anderson, Scott 3190 Perrot Av | 54.00 |
| 07/31/2019 | B19-120 | $2,500 | plumb | Afton Bldg Insp Fees:Stagg, Leann 15851 Afton Hills | 109.00 |
| 07/31/2019 | B19-134 | $9,000 | plumb | Afton Bldg Insp Fees:Johnson, Ken 3752 River Rd S | 109.00 |
| Jul 19 | | | | | 36,099.50 |
| **TOTAL** | | | | | **97,030.50** |

*City of Afton*
*Claims to be Approved*
*July 17, 2019 thru August 20, 2019*

**Checks Numbered**

| From | To | Description | To Be Approved |
|---|---|---|---|
| 23360 | | Z Systems: New Council Chambers Equipment | $6,889.92 |
| 23361 | 23387 | Applicant, Park Deposit Refunds + Routine Bills - Various | $15,359.98 |
| 23388 | 23392 | Significant Vendor Bills by Size or Nature | $19,163.52 |
| 23393 | | Wash Cty Sheriff: 1st Half 2019 Police Services | $94,505.58 |
| 23394 | 23402 | More Significant Vendor Bills by Size or Nature | $49,169.75 |
| 23403 | 23419 | More Routine Vendor Bills + Council Pay | $5,725.21 |
| 23420 | 23425 | More Significant Vendor Bills by Size or Nature | $21,904.00 |
| 201908001 | 201908009 | EFT/Direct Deposit: 7/31/19 Staff Payroll + PERA & Payroll Taxes | $11,096.12 |
| 201908010 | 201908030 | EFT: Phone, Postage, Copier Lease, Utility Bills | $4,375.16 |
| 201908031 | 201908045 | EFT/Dir Dep: 8/15/19 Staff & Council Pay/Exp + PERA & Payroll Taxes | $13,728.02 |
| 201908032 | | Wire Transfer (initiated by 4M Fund Personnell): 8/20/19 Principal and Interest on two PFA Loans. Stormwater Loan $52,000 Principal + $4,831 Interest. Sanitary Sewer Loan $59,000 Principal + $6,185 Interest. | $122,015.85 |
| | | **Claims to be approved at 8/20/19 meeting** | **$363,933.11** |

Submitted by Thomas H. Niedzwiecki, Accountant
File: Afton 2019 Claim Summary.xlsm Worksheet: Jul19 8/14/2019

08/14/19

# City of Afton
## Claims to be Approved
### July 17 through August 20, 2019

| Type | Date | Num | Name | Memo | Account | Original Amount |
|---|---|---|---|---|---|---|
| **Bill Pmt -Ch...** | **07/17/2019** | **23360** | **Z Systems** | | **100 · 4M 101/USB 2934 - General Fund** | **(6,889.92)** |
| Bill | 07/17/2019 | 45754 | 560 Spec Act Fd - Other:B. Community Communications:5561 Communications Ex... | New Council Chambers Equipment: Cameras, Workstation, Installation, Cab... | 5561 · Communications | 6,889.92 |
| TOTAL | | | | | | 6,889.92 |
| **Bill Pmt -Ch...** | **07/31/2019** | **23361** | **Christiansen, Bret J** | **1099 Vendor $30.00 per Hour** | **100 · 4M 101/USB 2934 - General Fund** | **(315.00)** |
| Bill | 07/31/2019 | July2019 | 100 Gen'l Fd:B. Exp:B01 G & A:B1.2 Prof Serv:5120 Contract - Video Meetings | Videographer 10.5 hrs @ $30/hr | 5120 · Contract - Video Meetings | 315.00 |
| TOTAL | | | | | | 315.00 |
| **Liability Che...** | **07/31/2019** | **23362** | **Madison National Life** | **103815000000000** | **100 · 4M 101/USB 2934 - General Fund** | **(191.78)** |
| | | | | 103815000000000 | 2325 · Madison Life ST & LT Disability | 144.68 |
| | | | | 103815000000000 | 2325 · Madison Life ST & LT Disability | 47.10 |
| TOTAL | | | | | | 191.78 |
| **Bill Pmt -Ch...** | **07/31/2019** | **23363** | **Wash Cty (Public Health)** | | **100 · 4M 101/USB 2934 - General Fund** | **(2,182.40)** |
| Bill | 07/31/2019 | Water Test Err... | | Water testing error: was supposed to be Invoice, not payment | 1190 · Other Receivables | 2,182.40 |
| TOTAL | | | | | | 2,182.40 |
| **Bill Pmt -Ch...** | **07/31/2019** | **23364** | **Afton Parade Committee** | **Park Deposit Refund 7/4/19** | **100 · 4M 101/USB 2934 - General Fund** | **(200.00)** |
| Bill | 07/31/2019 | ParkRefund2019 | | Park Deposit Refund 7/4/19 | 1185 · Park Deposits | 200.00 |
| TOTAL | | | | | | 200.00 |
| **Bill Pmt -Ch...** | **07/31/2019** | **23365** | **Memorial Lutheran Church (Vendor)** | **Refund Park Dep: 7/28/19** | **100 · 4M 101/USB 2934 - General Fund** | **(200.00)** |
| Bill | 07/31/2019 | ParkRefund7/2... | | Refund Park Dep: 7/28/19 | 1185 · Park Deposits | 200.00 |
| TOTAL | | | | | | 200.00 |
| **Bill Pmt -Ch...** | **07/31/2019** | **23366** | **Odden, Michelle** | **Park Deposit Refund 7/27/19** | **100 · 4M 101/USB 2934 - General Fund** | **(100.00)** |
| Bill | 07/31/2019 | ParkRefund7/2... | | Park Deposit Refund 7/27/19 | 1185 · Park Deposits | 100.00 |
| TOTAL | | | | | | 100.00 |
| **Check** | **07/31/2019** | **23367** | **Carlson, Will Z19-20 14220 60th Demo** | **Refund Demo Escrow Z19-20 Will Carlson** | **100 · 4M 101/USB 2934 - General Fund** | **(250.00)** |
| | | | Carlson, Will Z19-20 14220 60th Demo | Refund Demo Escrow Z19-20 Will Carlson | 2001 · Permit Escrow & Fees | 250.00 |
| TOTAL | | | | | | 250.00 |
| **Check** | **07/31/2019** | **23368** | **Carlson, Will Z19-21 5550 Odell Av S** | **Refund Demo Escrow Z19-21 Will Carlson** | **100 · 4M 101/USB 2934 - General Fund** | **(250.00)** |
| | | | Carlson, Will Z19-21 5550 Odell Av S | Refund Demo Escrow Z19-21 Will Carlson | 2001 · Permit Escrow & Fees | 250.00 |
| TOTAL | | | | | | 250.00 |
| **Check** | **07/31/2019** | **23369** | **Distinctive Z19-04 12234 Meadow** | **Refund Driveway Escrow Z19-04/B19-11** | **100 · 4M 101/USB 2934 - General Fund** | **(1,500.00)** |
| | | | Distinctive Z19-04 12234 Meadow | Refund Driveway Escrow Z19-04/B19-11 | 2001 · Permit Escrow & Fees | 1,500.00 |

# City of Afton
## Claims to be Approved
### July 17 through August 20, 2019

| Type | Date | Num | Name | Memo | Account | Original Amount |
|---|---|---|---|---|---|---|
| TOTAL | | | | | | 1,500.00 |
| **Check** | **07/31/2019** | **23370** | **Morri, Jake & Jenn Z18-28 1073 Indian Trl** | **Refund Driveway Escrow 18-28 Jake & Jenn Morri** | **100 · 4M 101/USB 2934 - General Fund** | **(1,500.00)** |
| | | | Morri, Jake & Jenn Z18-28 1073 Indian Trl | Refund Driveway Escrow 18-28 Jake & Jenn Morri | 2001 · Permit Escrow & Fees | 1,500.00 |
| TOTAL | | | | | | 1,500.00 |
| **Check** | **07/31/2019** | **23371** | **Swanson, Gary & Lori Z19-10 5468 Neal Av** | **Refund Minor Subdiv Escrow Z19-10** | **100 · 4M 101/USB 2934 - General Fund** | **(1,500.00)** |
| | | | Swanson, Gary & Lori Z19-10 5468 Neal Av | Refund Minor Subdiv Escrow Z19-10 | 2001 · Permit Escrow & Fees | 1,500.00 |
| TOTAL | | | | | | 1,500.00 |
| **Check** | **07/31/2019** | **23372** | **Swanson, Gary & Lori Z19-11 5468 Neal Av** | **Refund Variance Escrow Z19-11** | **100 · 4M 101/USB 2934 - General Fund** | **(600.00)** |
| | | | Swanson, Gary & Lori Z19-11 5468 Neal Av | Refund Variance Escrow Z19-11 | 2001 · Permit Escrow & Fees | 600.00 |
| TOTAL | | | | | | 600.00 |
| **Bill Pmt -Ch...** | **07/31/2019** | **23373** | **All Seasons Rental** | **Account No. 30890280** | **100 · 4M 101/USB 2934 - General Fund** | **(27.95)** |
| Bill | 07/31/2019 | 74693 | 100 Gen'l Fd:B. Exp:B05 Parks & Recreation:6135 Park Maintenance | Equipment supplies | 6135 · Park Maintenance | 27.95 |
| TOTAL | | | | | | 27.95 |
| **Bill Pmt -Ch...** | **07/31/2019** | **23374** | **Bayport Printing House, Inc.** | **Acct# CIAF01** | **100 · 4M 101/USB 2934 - General Fund** | **(135.00)** |
| Bill | 07/31/2019 | 2481-19 | 100 Gen'l Fd:B. Exp:B01 G & A:B1.4 Oth Exp:5540 Office Supplies | business cards | 5540 · Office Supplies | 135.00 |
| TOTAL | | | | | | 135.00 |
| **Bill Pmt -Ch...** | **07/31/2019** | **23375** | **City of Saint Paul** | **Customer No. 2092** | **100 · 4M 101/USB 2934 - General Fund** | **(811.80)** |
| Bill | 07/31/2019 | in35881 | 100 Gen'l Fd:B. Exp:B03 Strts, Rehab & Pub Wks:B3.1 Streets:5835 Surf Maint/Bit... | asphalt mix | 5835 · Surf Maint/Bit Patch/Sweeping | 811.80 |
| TOTAL | | | | | | 811.80 |
| **Bill Pmt -Ch...** | **07/31/2019** | **23376** | **Croixcavating** | | **100 · 4M 101/USB 2934 - General Fund** | **(135.00)** |
| Bill | 07/31/2019 | 192 | 100 Gen'l Fd:B. Exp:B03 Strts, Rehab & Pub Wks:B3.1 Streets:5820 Gravel Road ... | Carver park driveway, concrete curbs to 33th st | 5820 · Gravel Road Maintenance | 135.00 |
| TOTAL | | | | | | 135.00 |
| **Bill Pmt -Ch...** | **07/31/2019** | **23377** | **Finance and Commerce** | **Acct # 10052373** | **100 · 4M 101/USB 2934 - General Fund** | **(212.29)** |
| Bill | 07/31/2019 | 744361244 | 120 Street Imp Capital Fd:B. Exp:7984 River Road Sanitary Options | River Road Sanitary Imp Project | 7984 · River Road Sanitary Options | 212.29 |
| TOTAL | | | | | | 212.29 |
| **Bill Pmt -Ch...** | **07/31/2019** | **23378** | **Floyd Total Security** | **Acct No. 120857** | **100 · 4M 101/USB 2934 - General Fund** | **(92.07)** |
| Bill | 07/31/2019 | 1311985 | 100 Gen'l Fd:B. Exp:B04 Bldgs & Land:6040 Repairs & Maintenance | Base Alarm Monitoring 3 Months | 6040 · City Property Maintenance | 92.07 |
| TOTAL | | | | | | 92.07 |
| **Bill Pmt -Ch...** | **07/31/2019** | **23379** | **Frontier Ag & Turf (New Richmond)** | **Acct No. AFTON002** | **100 · 4M 101/USB 2934 - General Fund** | **(868.28)** |

# City of Afton
## Claims to be Approved
### July 17 through August 20, 2019

| Type | Date | Num | Name | Memo | Account | Original Amount |
|---|---|---|---|---|---|---|
| Bill | 07/31/2019 | w72620 | 100 Gen'l Fd:B. Exp:B03 Strts, Rehab & Pub Wks:B3.3 Oth Pub Wrks:5920 Repairs... | lawn mower with 54 x749 | 5920 · Repair & Maint Equipment | 868.28 |
| TOTAL | | | | | | 868.28 |
| **Bill Pmt -Ch...** | **07/31/2019** | **23380** | **Innovative Office Solutions LLC** | **customer # V105001** | **100 · 4M 101/USB 2934 - General Fund** | **(440.69)** |
| Bill | 07/31/2019 | in2592463 | 100 Gen'l Fd:B. Exp:B01 G & A:B1.4 Oth Exp:5540 Office Supplies | office supplies | 5540 · Office Supplies | 440.69 |
| TOTAL | | | | | | 440.69 |
| **Bill Pmt -Ch...** | **07/31/2019** | **23381** | **Menards - Hudson** | | **100 · 4M 101/USB 2934 - General Fund** | **(35.79)** |
| Bill | 07/31/2019 | 3141 | 100 Gen'l Fd:B. Exp:B04 Bldgs & Land:6050 Supplies | supplies | 6050 · Supplies - Bldg & Land | 0.80 |
| Bill | 07/31/2019 | 4035 | 100 Gen'l Fd:B. Exp:B04 Bldgs & Land:6050 Supplies | supplies | 6050 · Supplies - Bldg & Land | 34.99 |
| TOTAL | | | | | | 35.79 |
| **Bill Pmt -Ch...** | **07/31/2019** | **23382** | **Petersen Mgmt (Lab Fees)** | **Cust No. 3477** | **100 · 4M 101/USB 2934 - General Fund** | **(466.40)** |
| Bill | 07/31/2019 | 102682 | 410 Sanitary Sewer Utility:B. Exp:6060 Sanitary Sewer Oper - Exp:6066 Lab Fees | Lab fees | 6066 · Lab Fees | 466.40 |
| TOTAL | | | | | | 466.40 |
| **Bill Pmt -Ch...** | **07/31/2019** | **23383** | **Petersen Mgmt (Oper & Mgmt Fees)** | **Cust No. 3477** | **100 · 4M 101/USB 2934 - General Fund** | **(1,508.33)** |
| Bill | 07/31/2019 | 102689 | 410 Sanitary Sewer Utility:B. Exp:6060 Sanitary Sewer Oper - Exp:6065 Oper & M... | Operations and management fees Jul2019 | 6065 · Oper & Mgmt Fees | 1,508.33 |
| TOTAL | | | | | | 1,508.33 |
| **Bill Pmt -Ch...** | **07/31/2019** | **23384** | **Rumpca Excavating Inc** | | **100 · 4M 101/USB 2934 - General Fund** | **(304.80)** |
| Bill | 07/31/2019 | 14572 | 100 Gen'l Fd:B. Exp:B03 Strts, Rehab & Pub Wks:B3.1 Streets:5825 Crackseal/Seal... | lime rock, C5 | 5825 · Crackseal/Seal Coat/Shouldering | 201.19 |
| Bill | 07/31/2019 | 14710 | 100 Gen'l Fd:B. Exp:B03 Strts, Rehab & Pub Wks:B3.1 Streets:5825 Crackseal/Seal... | lime rock, C5 | 5825 · Crackseal/Seal Coat/Shouldering | 103.61 |
| TOTAL | | | | | | 304.80 |
| **Bill Pmt -Ch...** | **07/31/2019** | **23385** | **SavATree** | **Acct key 1017952** | **100 · 4M 101/USB 2934 - General Fund** | **(700.00)** |
| Bill | 07/31/2019 | 6706332 | 100 Gen'l Fd:B. Exp:B03 Strts, Rehab & Pub Wks:B3.1 Streets:5845 Brush/Tree/M... | up hill west of 33rd st off of st croix trail | 5845 · Brush/Tree/Sod/Seed | 700.00 |
| TOTAL | | | | | | 700.00 |
| **Bill Pmt -Ch...** | **07/31/2019** | **23386** | **St Croix Recreation Fun Playgrounds Inc.** | | **100 · 4M 101/USB 2934 - General Fund** | **(420.00)** |
| Bill | 07/31/2019 | 20190 | 200 Park Reserve Fd:B. Exp:6115 Pub Wks - Park & Open Space | Estate old leg package wv10153 | 6115 · Park & Open Space Public Works | 420.00 |
| TOTAL | | | | | | 420.00 |
| **Bill Pmt -Ch...** | **07/31/2019** | **23387** | **StarTech Computing, Inc** | | **100 · 4M 101/USB 2934 - General Fund** | **(412.40)** |
| Bill | 07/31/2019 | 1492 | 100 Gen'l Fd:B. Exp:B01 G & A:B1.4 Oth Exp:5510 Computer Serv/Software | Flexnet Maintenance and Support | 5510 · Computer Service/Software | 162.40 |
| Bill | 07/31/2019 | 1381 | 100 Gen'l Fd:B. Exp:B01 G & A:B1.4 Oth Exp:5510 Computer Serv/Software | Flexnet Maintenance and Support | 5510 · Computer Service/Software | 250.00 |
| TOTAL | | | | | | 412.40 |
| **Bill Pmt -Ch...** | **07/31/2019** | **23388** | **Tri-County Services (Streets, Other)** | | **100 · 4M 101/USB 2934 - General Fund** | **(4,772.50)** |
| Bill | 07/31/2019 | 639 | 100 Gen'l Fd:B. Exp:B03 Strts, Rehab & Pub Wks:B3.1 Streets:5820 Gravel Road ... | road grader 60th oak green | 5820 · Gravel Road Maintenance | 570.00 |
| Bill | 07/31/2019 | 638 | 100 Gen'l Fd:B. Exp:B03 Strts, Rehab & Pub Wks:B3.1 Streets:5835 Surf Maint/Bit... | pot holes 30th, 8th, valley creek | 5835 · Surf Maint/Bit Patch/Sweeping | 3,632.50 |

# City of Afton
## Claims to be Approved
### July 17 through August 20, 2019

| Type | Date | Num | Name | Memo | Account | Original Amount |
|---|---|---|---|---|---|---|
| Bill | 07/31/2019 | 640 | 100 Gen'l Fd:B. Exp:B03 Strts, Rehab & Pub Wks:B3.1 Streets:5845 Brush/Tree/M... | trees down call out sheriff | 5845 · Brush/Tree/Sod/Seed | 570.00 |
| TOTAL | | | | | | 4,772.50 |
| **Bill Pmt -Ch...** | **07/31/2019** | **23389** | **Wash Cty (Public Health)** | | **100 · 4M 101/USB 2934 - General Fund** | **(2,182.40)** |
| Bill | 07/31/2019 | WaterTesting | 100 Gen'l Fd:B. Exp:B01 G & A:B1.2 Prof Serv:5370 Well Monitoring Program | Water testing: Coliform Bacteria and Nitrate/Nitrogen | 5370 · Well Monitoring Program | 2,182.40 |
| TOTAL | | | | | | 2,182.40 |
| **Bill Pmt -Ch...** | **07/31/2019** | **23390** | **Wash Cty (Rd & Bridge)(Trans & Phys Dev)** | **Account No. 20490** | **100 · 4M 101/USB 2934 - General Fund** | **(3,115.87)** |
| Bill | 07/31/2019 | 158160 | 100 Gen'l Fd:B. Exp:B03 Strts, Rehab & Pub Wks:B3.1 Streets:5830 Snow & Ice C... | sand and salt 4/9 & 4/29 | 5830 · Snow & Ice Control | 3,115.87 |
| TOTAL | | | | | | 3,115.87 |
| **Bill Pmt -Ch...** | **08/20/2019** | **23391** | **Flagship Recreation** | | **100 · 4M 101/USB 2934 - General Fund** | **(3,734.00)** |
| Bill | 07/31/2019 | f3839 | 200 Park Reserve Fd:B. Exp:6115 Pub Wks - Park & Open Space | Install playground equip at Town Square Park | 6115 · Park & Open Space Public Works | 3,734.00 |
| TOTAL | | | | | | 3,734.00 |
| **Bill Pmt -Ch...** | **08/20/2019** | **23392** | **Landscape Structures** | | **100 · 4M 101/USB 2934 - General Fund** | **(5,358.75)** |
| Bill | 07/31/2019 | inv 075618 | 200 Park Reserve Fd:B. Exp:6115 Pub Wks - Park & Open Space | Playground equip for Town Square Park | 6115 · Park & Open Space Public Works | 5,358.75 |
| TOTAL | | | | | | 5,358.75 |
| **Bill Pmt -Ch...** | **08/20/2019** | **23393** | **Wash Cty (Sheriff)** | **Acct No. 20490** | **100 · 4M 101/USB 2934 - General Fund** | **(94,505.58)** |
| Bill | 07/31/2019 | 160968 | 100 Gen'l Fd:B. Exp:B02 Public Safety & Health:B2.1 Public Safety:5635 Police Ser... | Jan to Jun 2019 Police Services | 5635 · Police Services | 94,505.58 |
| TOTAL | | | | | | 94,505.58 |
| **Bill Pmt -Ch...** | **08/20/2019** | **23394** | **Niedzwiecki, Thomas H.** | **Accounting Services** | **100 · 4M 101/USB 2934 - General Fund** | **(360.00)** |
| Bill | 07/30/2019 | Audit2018e | 100 Gen'l Fd:B. Exp:B01 G & A:B1.2 Prof Serv:5305 Auditing Fees | Assistance re. 2018 Audit | 5305 · Auditing Fees | 360.00 |
| TOTAL | | | | | | 360.00 |
| **Bill Pmt -Ch...** | **08/20/2019** | **23395** | **Niedzwiecki, Thomas H.** | **Accounting Services** | **100 · 4M 101/USB 2934 - General Fund** | **(2,470.00)** |
| Bill | 07/31/2019 | 073119 | 100 Gen'l Fd:B. Exp:B01 G & A:B1.2 Prof Serv:5304 Accounting Fees | Monthly charge for Accounting Services per Contract Effective 6/1/19 | 5304 · Accounting Fees | 2,400.00 |
| | | | 100 Gen'l Fd:B. Exp:B01 G & A:B1.4 Oth Exp:5540 Office Supplies | Monthly charge for QB Pro software including Payroll Service & Forms | 5540 · Office Supplies | 30.00 |
| | | | 100 Gen'l Fd:B. Exp:B01 G & A:B1.4 Oth Exp:5540 Office Supplies | Mailing envelopes, copies of invoices, misc postage | 5540 · Office Supplies | 40.00 |
| TOTAL | | | | | | 2,470.00 |
| **Bill Pmt -Ch...** | **08/20/2019** | **23396** | **Stensland Inspection Services** | **Building Inspection Services** | **100 · 4M 101/USB 2934 - General Fund** | **(3,243.00)** |
| Bill | 07/31/2019 | July2019 | 100 Gen'l Fd:B. Exp:B01 G & A:B1.2 Prof Serv:5350 Bldg Insp Fees - Stensland | Bldg Permits | 5350 · Building Insp Fees - Stensland | 3,243.00 |
| TOTAL | | | | | | 3,243.00 |
| **Bill Pmt -Ch...** | **08/20/2019** | **23397** | **Tri-County Services (Streets, Other)** | | **100 · 4M 101/USB 2934 - General Fund** | **(15,115.00)** |
| Bill | 07/31/2019 | 659 | 100 Gen'l Fd:B. Exp:B03 Strts, Rehab & Pub Wks:B3.1 Streets:5835 Surf Maint/Bit... | gravel for oak green | 5835 · Surf Maint/Bit Patch/Sweeping | 570.00 |
| Bill | 07/31/2019 | 653 | 100 Gen'l Fd:B. Exp:B03 Strts, Rehab & Pub Wks:B3.1 Streets:5825 Crackseal/Seal... | dump truck with shouldering machine | 5825 · Crackseal/Seal Coat/Shouldering | 4,947.50 |
| Bill | 07/31/2019 | 656 | 100 Gen'l Fd:B. Exp:B04 Bldgs & Land:6030 Misc Expense | city garage tree removal | 6030 · Misc Exp - Bldg & Land | 332.50 |
| Bill | 07/31/2019 | 658 | 100 Gen'l Fd:B. Exp:B03 Strts, Rehab & Pub Wks:B3.1 Streets:5820 Gravel Road ... | road grade 60th and trading post | 5820 · Gravel Road Maintenance | 475.00 |

# City of Afton
## Claims to be Approved
### July 17 through August 20, 2019

| Type | Date | Num | Name | Memo | Account | Original Amount |
|---|---|---|---|---|---|---|
| Bill | 07/31/2019 | 660 | 100 Gen'l Fd:B. Exp:B03 Strts, Rehab & Pub Wks:B3.1 Streets:5820 Gravel Road ... | grade mount hope | 5820 · Gravel Road Maintenance | 237.50 |
| Bill | 07/31/2019 | 652 | 100 Gen'l Fd:B. Exp:B03 Strts, Rehab & Pub Wks:B3.1 Streets:5825 Crackseal/Seal... | rip rap odell ave | 5825 · Crackseal/Seal Coat/Shouldering | 380.00 |
| Bill | 07/31/2019 | 657 | 100 Gen'l Fd:B. Exp:B03 Strts, Rehab & Pub Wks:B3.1 Streets:5870 Other Road M... | put out barriers and signs odell and trading post | 5870 · Other Road Maintenance | 1,000.00 |
| Bill | 07/31/2019 | 654 | 100 Gen'l Fd:B. Exp:B03 Strts, Rehab & Pub Wks:B3.1 Streets:5845 Brush/Tree/M... | 2 guys trying to find culvert river road with vac | 5845 · Brush/Tree/Sod/Seed | 285.00 |
| Bill | 07/31/2019 | 655 | 100 Gen'l Fd:B. Exp:B03 Strts, Rehab & Pub Wks:B3.1 Streets:5845 Brush/Tree/M... | dump truck, skid steer, ditch work culvert, grade and seed | 5845 · Brush/Tree/Sod/Seed | 1,140.00 |
| Bill | 07/31/2019 | 661 | 100 Gen'l Fd:B. Exp:B03 Strts, Rehab & Pub Wks:B3.1 Streets:5845 Brush/Tree/M... | ditch mow | 5845 · Brush/Tree/Sod/Seed | 5,747.50 |
| TOTAL | | | | | | 15,115.00 |
| **Bill Pmt -Ch...** | **08/20/2019** | **23398** | **Wenck Associates Inc.** | **project 2656-04** | **100 · 4M 101/USB 2934 - General Fund** | **(632.00)** |
| Bill | 07/31/2019 | 11904967 | 805 City InfraStructure Imp Fd:B. Exp:8896 Sanitary Sewer Imp | Wastewater system engineering | 8896 · Sanitary Sewer Improvements | 632.00 |
| TOTAL | | | | | | 632.00 |
| **Bill Pmt -Ch...** | **08/20/2019** | **23399** | **WSB (3M Working Groups)** | **R-011907-000 3M Working Groups** | **100 · 4M 101/USB 2934 - General Fund** | **(730.50)** |
| Bill | 07/31/2019 | 11 | 100 Gen'l Fd:B. Exp:B01 G & A:B1.2 Prof Serv:5310 Engineering Fees | Engineering Services for 3M Working Groups | 5310 · Engineering Fees | 730.50 |
| TOTAL | | | | | | 730.50 |
| **Bill Pmt -Ch...** | **08/20/2019** | **23400** | **WSB (Applicants)** | **Customer No. 01856** | **100 · 4M 101/USB 2934 - General Fund** | **(13,394.50)** |
| Bill | 07/31/2019 | 20 | 100 Gen'l Fd:B. Exp:B01 G & A:B1.2 Prof Serv:5310 Engineering Fees | Afton Creek Preserve Construction Coordination | 5310 · Engineering Fees | 13,394.50 |
| TOTAL | | | | | | 13,394.50 |
| **Bill Pmt -Ch...** | **08/20/2019** | **23401** | **WSB (City Engineer)** | **R-013251-000 City Engineer** | **100 · 4M 101/USB 2934 - General Fund** | **(4,577.00)** |
| Bill | 07/31/2019 | 6 | 100 Gen'l Fd:B. Exp:B01 G & A:B1.2 Prof Serv:5310 Engineering Fees | City engineer | 5310 · Engineering Fees | 2,240.50 |
| | | | 120 Street Imp Capital Fd:B. Exp:7984 River Road Sanitary Options | River Road Sanitary Sewer | 7984 · River Road Sanitary Options | 83.00 |
| | | | 805 City InfraStructure Imp Fd:B. Exp:8899 Village Improvements | Downtown Project | 8899 · Village Improvements | 1,963.00 |
| | | | 550 Special Activities Fd - General:D. Flood, Storm Wtr & Snow Ice:7836 Flood & ... | 2019 Flood | 7836 · Flood & Storm Wtr Exp - Gen'l | 166.00 |
| | | | 100 Gen'l Fd:B. Exp:B01 G & A:B1.2 Prof Serv:5310 Engineering Fees | Escrow Scott Koziar Driveway Review | 5310 · Engineering Fees | 124.50 |
| TOTAL | | | | | | 4,577.00 |
| **Bill Pmt -Ch...** | **08/20/2019** | **23402** | **WSB (River Road Sanitary Sewer)** | **Project R-014030-000** | **100 · 4M 101/USB 2934 - General Fund** | **(8,647.75)** |
| Bill | 07/31/2019 | 3 | 120 Street Imp Capital Fd:B. Exp:7984 River Road Sanitary Options | River Road Sanitary Sewer Improvements | 7984 · River Road Sanitary Options | 8,647.75 |
| TOTAL | | | | | | 8,647.75 |
| **Bill Pmt -Ch...** | **08/20/2019** | **23403** | **Bayport Printing House, Inc.** | **Acct# CIAF01** | **100 · 4M 101/USB 2934 - General Fund** | **(140.00)** |
| Bill | 07/31/2019 | 3183-19 | 100 Gen'l Fd:B. Exp:B01 G & A:B1.4 Oth Exp:5540 Office Supplies | 500 Building inspection forms | 5540 · Office Supplies | 140.00 |
| TOTAL | | | | | | 140.00 |
| **Bill Pmt -Ch...** | **08/20/2019** | **23404** | **Croix Crystal Water Treatment** | **cooler lease and water** | **100 · 4M 101/USB 2934 - General Fund** | **(20.25)** |
| Bill | 07/31/2019 | 61424 | 100 Gen'l Fd:B. Exp:B04 Bldgs & Land:6030 Misc Expense | rent on hot & cold cooler, bottled water | 6030 · Misc Exp - Bldg & Land | 20.25 |
| TOTAL | | | | | | 20.25 |
| **Bill Pmt -Ch...** | **08/20/2019** | **23405** | **Culligan of Stillwater** | **Account # 306-01656131-9** | **100 · 4M 101/USB 2934 - General Fund** | **(69.80)** |
| Bill | 07/31/2019 | 306x01425303 | 100 Gen'l Fd:B. Exp:B05 Parks & Recreation:6135 Park Maintenance | Town Square Park restroom | 6135 · Park Maintenance | 69.80 |
| TOTAL | | | | | | 69.80 |

# City of Afton
## Claims to be Approved
### July 17 through August 20, 2019

| Type | Date | Num | Name | Memo | Account | Original Amount |
|---|---|---|---|---|---|---|
| **Bill Pmt -Ch...** | **08/20/2019** | **23406** | **Gopher State One Call** | **Acct No. MN00128** | **100 · 4M 101/USB 2934 - General Fund** | **(9.45)** |
| Bill | 07/31/2019 | 9070164 | 100 Gen'l Fd:B. Exp:B03 Strts, Rehab & Pub Wks:B3.1 Streets:5870 Other Road M... | Cafton01 FTP Tickets | 5870 · Other Road Maintenance | 9.45 |
| TOTAL | | | | | | 9.45 |
| **Bill Pmt -Ch...** | **08/20/2019** | **23407** | **GovOffice** | | **100 · 4M 101/USB 2934 - General Fund** | **(1,350.00)** |
| Bill | 07/31/2019 | inv1934 | 100 Gen'l Fd:B. Exp:B01 G & A:B1.4 Oth Exp:5510 Computer Serv/Software | Annual hosting fee 2019 | 5510 · Computer Service/Software | 650.00 |
| | | | 100 Gen'l Fd:B. Exp:B01 G & A:B1.4 Oth Exp:5510 Computer Serv/Software | Extended storage plan annual fee | 5510 · Computer Service/Software | 700.00 |
| TOTAL | | | | | | 1,350.00 |
| **Bill Pmt -Ch...** | **08/20/2019** | **23408** | **Highland Sanitation** | **Acct No. 7208** | **100 · 4M 101/USB 2934 - General Fund** | **(202.12)** |
| Bill | 07/31/2019 | 619938 | 100 Gen'l Fd:B. Exp:B02 Public Safety & Health:B2.2 Public Health:5720 City Hall ... | trash, recycling service | 5720 · Refuse Hauling - City Hall | 202.12 |
| TOTAL | | | | | | 202.12 |
| **Bill Pmt -Ch...** | **08/20/2019** | **23409** | **Newman Traffic Signs** | **Cust No. AFT-03-002** | **100 · 4M 101/USB 2934 - General Fund** | **(403.01)** |
| Bill | 07/31/2019 | trfinv013593 | 100 Gen'l Fd:B. Exp:B03 Strts, Rehab & Pub Wks:B3.1 Streets:5860 Signs & Signals | Various signs | 5860 · Signs & Signals | 403.01 |
| TOTAL | | | | | | 403.01 |
| **Bill Pmt -Ch...** | **08/20/2019** | **23410** | **Petersen Mgmt (Lab Fees)** | **Cust No. 3477** | **100 · 4M 101/USB 2934 - General Fund** | **(233.20)** |
| Bill | 07/31/2019 | 102967 | 410 Sanitary Sewer Utility:B. Exp:6060 Sanitary Sewer Oper - Exp:6066 Lab Fees | Lab fees | 6066 · Lab Fees | 233.20 |
| TOTAL | | | | | | 233.20 |
| **Bill Pmt -Ch...** | **08/20/2019** | **23411** | **Rumpca Excavating Inc** | | **100 · 4M 101/USB 2934 - General Fund** | **(866.80)** |
| Bill | 07/31/2019 | 14744 | 100 Gen'l Fd:B. Exp:B03 Strts, Rehab & Pub Wks:B3.1 Streets:5825 Crackseal/Seal... | lime rock, C5, riprap classII thru IV | 5825 · Crackseal/Seal Coat/Shouldering | 866.80 |
| TOTAL | | | | | | 866.80 |
| **Bill Pmt -Ch...** | **08/20/2019** | **23412** | **StarTech Computing, Inc** | | **100 · 4M 101/USB 2934 - General Fund** | **(402.17)** |
| Bill | 07/30/2019 | 49658 | 100 Gen'l Fd:B. Exp:B01 G & A:B1.4 Oth Exp:5510 Computer Serv/Software | Equipment and supplies | 5510 · Computer Service/Software | 239.77 |
| Bill | 07/31/2019 | 1518 | 100 Gen'l Fd:B. Exp:B01 G & A:B1.4 Oth Exp:5510 Computer Serv/Software | Flexnet Maintenance and Support | 5510 · Computer Service/Software | 162.40 |
| TOTAL | | | | | | 402.17 |
| **Bill Pmt -Ch...** | **08/20/2019** | **23413** | **Wash Cty (Recorder)** | | **100 · 4M 101/USB 2934 - General Fund** | **(46.00)** |
| Bill | 07/31/2019 | p437646 | 100 Gen'l Fd:B. Exp:B01 G & A:B1.2 Prof Serv:5315 Recording Fees | 4201351 Kathy Bolton-Iverson | 5515 · Recording Expense | 46.00 |
| TOTAL | | | | | | 46.00 |
| **Paycheck** | **08/15/2019** | **23414** | **Nelson, Randall P** | | **100 · 4M 101/USB 2934 - General Fund** | **(187.10)** |
| | | | 100 Gen'l Fd:B. Exp:B01 G & A:B1.1 Wages & Benefits:5002 Mayor & Council Wa... | | 5002 · Mayor & Council Wages | 200.00 |
| | | | | | 2303 · PERA Payable - Council | (10.00) |
| | | | 100 Gen'l Fd:B. Exp:B01 G & A:B1.1 Wages & Benefits:5002 Mayor & Council Wa... | | 5053 · PERA Contribution - Employer | 10.00 |
| | | | | | 2303 · PERA Payable - Council | (10.00) |
| | | | 100 Gen'l Fd:B. Exp:B01 G & A:B1.1 Wages & Benefits:5002 Mayor & Council Wa... | | 5052 · Medicare Tax - Employer | 2.90 |
| | | | | | 2213 · Medicare Payable - Employer | (2.90) |

# City of Afton
## Claims to be Approved
### July 17 through August 20, 2019

| Type | Date | Num | Name | Memo | Account | Original Amount |
|---|---|---|---|---|---|---|
| | | | | | 2212 · Medicare W/H - Employee | (2.90) |
| TOTAL | | | | | | 187.10 |
| **Check** | **07/31/2019** | **23415** | **Agnessi, Mark & Tischa Z19-17 14255 E Oak** | **Refund Swim Pool Escrow Z19-17** | **100 · 4M 101/USB 2934 - General Fund** | **(1,000.00)** |
| | | | Agnessi, Mark & Tischa Z19-17 14255 E Oak | Refund Swim Pool Escrow Z19-17 | 2001 · Permit Escrow & Fees | 1,000.00 |
| TOTAL | | | | | | 1,000.00 |
| **Bill Pmt -Ch...** | **08/20/2019** | **23416** | **Frontier Ag & Turf (New Richmond)** | | **100 · 4M 101/USB 2934 - General Fund** | **(254.53)** |
| Bill | 07/31/2019 | w73797 | 100 Gen'l Fd:B. Exp:B03 Strts, Rehab & Pub Wks:B3.3 Oth Pub Wrks:5920 Repairs... | Z950M 60 in | 5920 · Repair & Maint Equipment | 135.24 |
| Bill | 07/31/2019 | w73798 | 100 Gen'l Fd:B. Exp:B03 Strts, Rehab & Pub Wks:B3.3 Oth Pub Wrks:5920 Repairs... | Lawn mower x749 54 in | 5920 · Repair & Maint Equipment | 119.29 |
| TOTAL | | | | | | 254.53 |
| **Bill Pmt -Ch...** | **08/20/2019** | **23417** | **Menards - Hudson** | | **100 · 4M 101/USB 2934 - General Fund** | **(173.90)** |
| Bill | 07/31/2019 | 5022 | 100 Gen'l Fd:B. Exp:B05 Parks & Recreation:6135 Park Maintenance | supplies | 6135 · Park Maintenance | 45.87 |
| Bill | 07/31/2019 | 5023 | 100 Gen'l Fd:B. Exp:B04 Bldgs & Land:6050 Supplies | supplies | 6050 · Supplies - Bldg & Land | 31.32 |
| Bill | 07/31/2019 | 5199 | 100 Gen'l Fd:B. Exp:B05 Parks & Recreation:6135 Park Maintenance | supplies | 6135 · Park Maintenance | 96.71 |
| TOTAL | | | | | | 173.90 |
| **Bill Pmt -Ch...** | **08/20/2019** | **23418** | **Northwest Assoc (City Projects)** | **Technical Assistance - City Projects** | **100 · 4M 101/USB 2934 - General Fund** | **(268.00)** |
| Bill | 07/31/2019 | 24342 | 100 Gen'l Fd:B. Exp:B01 G & A:B1.2 Prof Serv:5330 Planning Fees | City Projects | 5330 · Planning Fees | 268.00 |
| TOTAL | | | | | | 268.00 |
| **Bill Pmt -Ch...** | **08/20/2019** | **23419** | **Pioneer Press** | **Acct # 415245** | **100 · 4M 101/USB 2934 - General Fund** | **(98.88)** |
| Bill | 07/31/2019 | 0719415245 | 100 Gen'l Fd:B. Exp:B01 G & A:B1.4 Oth Exp:5555 Publishing & Printing | Legals: | 5555 · Publishing & Printing | 98.88 |
| TOTAL | | | | | | 98.88 |
| **Bill Pmt -Ch...** | **08/20/2019** | **23420** | **Felhaber Larson** | **File No. 0299687.00001** | **100 · 4M 101/USB 2934 - General Fund** | **(2,880.00)** |
| Bill | 07/31/2019 | 648657 | 806 PFA Loan Debt Serv:7749 Dwtn Imp - Special Assess Exp | Village Wastewater Treatment Facility: Special assessment | 7749 · Dwtn Imp - Special Assess Exp | 2,880.00 |
| TOTAL | | | | | | 2,880.00 |
| **Bill Pmt -Ch...** | **08/20/2019** | **23421** | **Felhaber Larson** | **File No. 0299687.00004** | **100 · 4M 101/USB 2934 - General Fund** | **(7,440.00)** |
| Bill | 07/31/2019 | 48658 | 806 PFA Loan Debt Serv:7749 Dwtn Imp - Special Assess Exp | Afton St Croix Condemnation Appeal | 7749 · Dwtn Imp - Special Assess Exp | 7,440.00 |
| TOTAL | | | | | | 7,440.00 |
| **Bill Pmt -Ch...** | **08/20/2019** | **23422** | **Flagship Recreation** | | **100 · 4M 101/USB 2934 - General Fund** | **(500.00)** |
| Bill | 07/31/2019 | f3855 | 200 Park Reserve Fd:B. Exp:6115 Pub Wks - Park & Open Space | Wood fiber for playground equip at Town Square Park | 6115 · Park & Open Space Public Works | 500.00 |
| TOTAL | | | | | | 500.00 |
| **Bill Pmt -Ch...** | **08/20/2019** | **23423** | **Holstad & Knaak, PLC** | **Legal Services** | **100 · 4M 101/USB 2934 - General Fund** | **(4,500.00)** |
| Bill | 07/31/2019 | July2019 | 100 Gen'l Fd:B. Exp:B01 G & A:B1.2 Prof Serv:5321 General - Legal Fees | Civil | 5321 · Legal Fees - General | 1,399.71 |
| | | | 100 Gen'l Fd:B. Exp:B01 G & A:B1.2 Prof Serv:5320 Prosecution - Legal Fees | Criminal | 5320 · Legal Fees - Prosecution | 3,100.29 |

# City of Afton
## Claims to be Approved
### July 17 through August 20, 2019

| Type | Date | Num | Name | Memo | Account | Original Amount |
|---|---|---|---|---|---|---|
| TOTAL | | | | | | 4,500.00 |
| **Bill Pmt -Ch...** | **08/20/2019** | **23424** | **McKinzie Metro Appraisal** | **File No: 19-0524AF-JH** | **100 · 4M 101/USB 2934 - General Fund** | **(6,050.00)** |
| Bill | 07/31/2019 | 19-0311afjh | 805 City InfraStructure Imp Fd:B. Exp:8892 Dwntown Imp - Easemnts & Damages | Court hearings, etc re. easement acquisitions for Downtown Project | 8892 · Dwntwn Imp - Easemnts & Damages | 6,050.00 |
| TOTAL | | | | | | 6,050.00 |
| **Bill Pmt -Ch...** | **08/20/2019** | **23425** | **McKinzie Metro Appraisal** | **File No: 19-0524AF-JH** | **100 · 4M 101/USB 2934 - General Fund** | **(534.00)** |
| Bill | 07/31/2019 | 17-0321afj2 | 805 City InfraStructure Imp Fd:B. Exp:8892 Dwntown Imp - Easemnts & Damages | Printed copies of appraisal reports re. easement acquisitions for Downtown ... | 8892 · Dwntwn Imp - Easemnts & Damages | 534.00 |
| TOTAL | | | | | | 534.00 |
| **Paycheck** | **07/31/2019** | **201908001** | **Meade, Debra J** | **Direct Deposit** | **100 · 4M 101/USB 2934 - General Fund** | **0.00** |
| | | | 100 Gen'l Fd:B. Exp:B01 G & A:B1.1 Wages & Benefits:5007 Intern/Office Asst W... | Direct Deposit | 5007 · Intern/Office Assistant Wages | 984.17 |
| | | | | Direct Deposit | 2302 · PERA Payable - Staff | (63.97) |
| | | | 100 Gen'l Fd:B. Exp:B01 G & A:B1.1 Wages & Benefits:5007 Intern/Office Asst W... | Direct Deposit | 5053 · PERA Contribution - Employer | 73.81 |
| | | | | Direct Deposit | 2302 · PERA Payable - Staff | (73.81) |
| | | | | Direct Deposit | 2210 · Federal Withholding | (103.00) |
| | | | 100 Gen'l Fd:B. Exp:B01 G & A:B1.1 Wages & Benefits:5007 Intern/Office Asst W... | Direct Deposit | 5051 · Social Security Tax - Employer | 61.02 |
| | | | | Direct Deposit | 2205 · Soc Sec Payable - Employer | (61.02) |
| | | | | Direct Deposit | 2204 · Social Security W/H - Employee | (61.02) |
| | | | 100 Gen'l Fd:B. Exp:B01 G & A:B1.1 Wages & Benefits:5007 Intern/Office Asst W... | Direct Deposit | 5052 · Medicare Tax - Employer | 14.27 |
| | | | | Direct Deposit | 2213 · Medicare Payable - Employer | (14.27) |
| | | | | Direct Deposit | 2212 · Medicare W/H - Employee | (14.27) |
| | | | | Direct Deposit | 2208 · MN State Withholding | (49.00) |
| | | | | Direct Deposit | 2110 · Direct Deposit Liabilities | (75.00) |
| | | | | Direct Deposit | 2110 · Direct Deposit Liabilities | (617.91) |
| TOTAL | | | | | | 0.00 |
| **Paycheck** | **07/31/2019** | **201908002** | **Cernohous, Cole G** | **Direct Deposit** | **100 · 4M 101/USB 2934 - General Fund** | **0.00** |
| | | | 100 Gen'l Fd:B. Exp:B01 G & A:B1.1 Wages & Benefits:5020 Gen'l Maint Wages &... | Direct Deposit | 5020 · Maintenance Person | 81.00 |
| | | | 100 Gen'l Fd:B. Exp:B01 G & A:B1.1 Wages & Benefits:5020 Gen'l Maint Wages &... | Direct Deposit | 5051 · Social Security Tax - Employer | 5.02 |
| | | | | Direct Deposit | 2205 · Soc Sec Payable - Employer | (5.02) |
| | | | | Direct Deposit | 2204 · Social Security W/H - Employee | (5.02) |
| | | | 100 Gen'l Fd:B. Exp:B01 G & A:B1.1 Wages & Benefits:5020 Gen'l Maint Wages &... | Direct Deposit | 5052 · Medicare Tax - Employer | 1.17 |
| | | | | Direct Deposit | 2213 · Medicare Payable - Employer | (1.17) |
| | | | | Direct Deposit | 2212 · Medicare W/H - Employee | (1.17) |
| | | | | Direct Deposit | 2110 · Direct Deposit Liabilities | (74.81) |
| TOTAL | | | | | | 0.00 |
| **Paycheck** | **07/31/2019** | **201908003** | **Johnson, Kenneth L** | **Direct Deposit** | **100 · 4M 101/USB 2934 - General Fund** | **0.00** |
| | | | 100 Gen'l Fd:B. Exp:B01 G & A:B1.1 Wages & Benefits:5020 Gen'l Maint Wages &... | Direct Deposit | 5020 · Maintenance Person | 1,258.66 |
| | | | | Direct Deposit | 2302 · PERA Payable - Staff | (81.81) |
| | | | 100 Gen'l Fd:B. Exp:B01 G & A:B1.1 Wages & Benefits:5020 Gen'l Maint Wages &... | Direct Deposit | 5053 · PERA Contribution - Employer | 94.40 |
| | | | | Direct Deposit | 2302 · PERA Payable - Staff | (94.40) |
| | | | | Direct Deposit | 2210 · Federal Withholding | (114.00) |
| | | | 100 Gen'l Fd:B. Exp:B01 G & A:B1.1 Wages & Benefits:5020 Gen'l Maint Wages &... | Direct Deposit | 5051 · Social Security Tax - Employer | 78.04 |
| | | | | Direct Deposit | 2205 · Soc Sec Payable - Employer | (78.04) |
| | | | | Direct Deposit | 2204 · Social Security W/H - Employee | (78.04) |
| | | | 100 Gen'l Fd:B. Exp:B01 G & A:B1.1 Wages & Benefits:5020 Gen'l Maint Wages &... | Direct Deposit | 5052 · Medicare Tax - Employer | 18.25 |
| | | | | Direct Deposit | 2213 · Medicare Payable - Employer | (18.25) |
| | | | | Direct Deposit | 2212 · Medicare W/H - Employee | (18.25) |
| | | | | Direct Deposit | 2208 · MN State Withholding | (58.00) |
| | | | | Direct Deposit | 2110 · Direct Deposit Liabilities | (908.56) |

# City of Afton
## Claims to be Approved
### July 17 through August 20, 2019

| Type | Date | Num | Name | Memo | Account | Original Amount |
|---|---|---|---|---|---|---|
| TOTAL | | | | | | 0.00 |
| **Paycheck** | **07/31/2019** | **201908004** | **Yoho, Julie D** | **Direct Deposit** | **100 · 4M 101/USB 2934 - General Fund** | **0.00** |
| | | | 100 Gen'l Fd:B. Exp:B01 G & A:B1.1 Wages & Benefits:5008 Office Manager Wag... | Direct Deposit | 5008 · Office Manager Wages | 2,226.32 |
| | | | | Direct Deposit | 2302 · PERA Payable - Staff | (144.71) |
| | | | 100 Gen'l Fd:B. Exp:B01 G & A:B1.1 Wages & Benefits:5008 Office Manager Wag... | Direct Deposit | 5053 · PERA Contribution - Employer | 166.97 |
| | | | | Direct Deposit | 2302 · PERA Payable - Staff | (166.97) |
| | | | 100 Gen'l Fd:B. Exp:B01 G & A:B1.1 Wages & Benefits:5008 Office Manager Wag... | Direct Deposit | 5018 · Insurance Benefits | 18.75 |
| | | | | Direct Deposit | 2325 · Madison Life ST & LT Disability | (18.75) |
| | | | 100 Gen'l Fd:B. Exp:B01 G & A:B1.1 Wages & Benefits:5008 Office Manager Wag... | Direct Deposit | 2325 · Madison Life ST & LT Disability | (35.87) |
| | | | | Direct Deposit | 2210 · Federal Withholding | (154.00) |
| | | | 100 Gen'l Fd:B. Exp:B01 G & A:B1.1 Wages & Benefits:5008 Office Manager Wag... | Direct Deposit | 5051 · Social Security Tax - Employer | 138.03 |
| | | | | Direct Deposit | 2205 · Soc Sec Payable - Employer | (138.03) |
| | | | | Direct Deposit | 2204 · Social Security W/H - Employee | (138.03) |
| | | | 100 Gen'l Fd:B. Exp:B01 G & A:B1.1 Wages & Benefits:5008 Office Manager Wag... | Direct Deposit | 5052 · Medicare Tax - Employer | 32.28 |
| | | | | Direct Deposit | 2213 · Medicare Payable - Employer | (32.28) |
| | | | | Direct Deposit | 2212 · Medicare W/H - Employee | (32.28) |
| | | | | Direct Deposit | 2208 · MN State Withholding | (82.00) |
| | | | | Direct Deposit | 2110 · Direct Deposit Liabilities | (1,639.43) |
| TOTAL | | | | | | 0.00 |
| **Paycheck** | **07/31/2019** | **201908005** | **Moorse, Ronald J** | **Direct Deposit** | **100 · 4M 101/USB 2934 - General Fund** | **0.00** |
| | | | 100 Gen'l Fd:B. Exp:B01 G & A:B1.1 Wages & Benefits:5004 Administrator Wages... | Direct Deposit | 5004 · Administrator Salary | 4,129.17 |
| | | | 100 Gen'l Fd:B. Exp:B01 G & A:B1.1 Wages & Benefits:5004 Administrator Wages... | Direct Deposit | 5053 · PERA Contribution - Employer | 309.69 |
| | | | | Direct Deposit | 2302 · PERA Payable - Staff | (309.69) |
| | | | | Direct Deposit | 2302 · PERA Payable - Staff | (268.40) |
| | | | 100 Gen'l Fd:B. Exp:B01 G & A:B1.1 Wages & Benefits:5004 Administrator Wages... | Direct Deposit | 5037 · Flexible Benefits | 1,155.50 |
| | | | 100 Gen'l Fd:B. Exp:B01 G & A:B1.1 Wages & Benefits:5004 Administrator Wages... | Direct Deposit | 5018 · Insurance Benefits | 28.35 |
| | | | | Direct Deposit | 2325 · Madison Life ST & LT Disability | (28.35) |
| | | | 100 Gen'l Fd:B. Exp:B01 G & A:B1.1 Wages & Benefits:5004 Administrator Wages... | Direct Deposit | 2325 · Madison Life ST & LT Disability | (108.81) |
| | | | | Direct Deposit | 2210 · Federal Withholding | (1,100.00) |
| | | | 100 Gen'l Fd:B. Exp:B01 G & A:B1.1 Wages & Benefits:5004 Administrator Wages... | Direct Deposit | 5051 · Social Security Tax - Employer | 327.65 |
| | | | | Direct Deposit | 2205 · Soc Sec Payable - Employer | (327.65) |
| | | | | Direct Deposit | 2204 · Social Security W/H - Employee | (327.65) |
| | | | 100 Gen'l Fd:B. Exp:B01 G & A:B1.1 Wages & Benefits:5004 Administrator Wages... | Direct Deposit | 5052 · Medicare Tax - Employer | 76.63 |
| | | | | Direct Deposit | 2213 · Medicare Payable - Employer | (76.63) |
| | | | | Direct Deposit | 2212 · Medicare W/H - Employee | (76.63) |
| | | | | Direct Deposit | 2208 · MN State Withholding | (300.00) |
| | | | | Direct Deposit | 2110 · Direct Deposit Liabilities | (3,103.18) |
| TOTAL | | | | | | 0.00 |
| **Liability Che...** | **07/30/2019** | **201908006** | **QuickBooks Payroll Service** | **Created by Payroll Service on 07/26/2019** | **100 · 4M 101/USB 2934 - General Fund** | **(6,427.64)** |
| | | | 100 Gen'l Fd:B. Exp:B01 G & A:B1.4 Oth Exp:5505 Bank/IRS Fees/Sales Tax | Fee for 5 direct deposit(s) at $1.75 each | 5505 · Bank/IRS/Sales Tax | 8.75 |
| | | | QuickBooks Payroll Service | Created by Payroll Service on 07/26/2019 | 2110 · Direct Deposit Liabilities | 6,418.89 |
| TOTAL | | | | | | 6,427.64 |
| **Liability Che...** | **07/31/2019** | **201908007** | **PERA (Staff)** | **3030-01 210990** | **100 · 4M 101/USB 2934 - General Fund** | **(1,203.76)** |
| | | | | 3030-01 210990 | 2302 · PERA Payable - Staff | 558.89 |
| | | | | 3030-01 210990 | 2302 · PERA Payable - Staff | 644.87 |
| TOTAL | | | | | | 1,203.76 |
| **Liability Che...** | **07/31/2019** | **201908008** | **IRS (US Treasury)** | **41-1290668** | **100 · 4M 101/USB 2934 - General Fund** | **(2,975.72)** |
| | | | | 41-1290668 | 2210 · Federal Withholding | 1,471.00 |

# City of Afton
## Claims to be Approved
### July 17 through August 20, 2019

| Type | Date | Num | Name | Memo | Account | Original Amount |
|---|---|---|---|---|---|---|
| | | | | 41-1290668 | 2213 · Medicare Payable - Employer | 142.60 |
| | | | | 41-1290668 | 2212 · Medicare W/H - Employee | 142.60 |
| | | | | 41-1290668 | 2205 · Soc Sec Payable - Employer | 609.76 |
| | | | | 41-1290668 | 2204 · Social Security W/H - Employee | 609.76 |
| TOTAL | | | | | | 2,975.72 |
| **Liability Che...** | **07/31/2019** | **201908009** | **MN Dept of Revenue** | **5050730** | **100 · 4M 101/USB 2934 - General Fund** | **(489.00)** |
| | | | | 5050730 | 2208 · MN State Withholding | 489.00 |
| TOTAL | | | | | | 489.00 |
| **Bill Pmt -Ch...** | **07/31/2019** | **201908010** | **Comcast {City Hall} 8772105 720001508** | **Account # 8772 10 572 0001508** | **100 · 4M 101/USB 2934 - General Fund** | **(299.55)** |
| Bill | 07/31/2019 | 073119 | 100 Gen'l Fd:B. Exp:B01 G & A:B1.4 Oth Exp:5565 Telephone | Comcast Business Internet and Voice | 5565 · Telephone | 299.55 |
| TOTAL | | | | | | 299.55 |
| **Bill Pmt -Ch...** | **07/31/2019** | **201908011** | **Comcast {Garage} 8772105 720011622** | | **100 · 4M 101/USB 2934 - General Fund** | **(141.37)** |
| Bill | 07/31/2019 | 073119 | 100 Gen'l Fd:B. Exp:B04 Bldgs & Land:6045 City Garage Expense | Sheriff Phone and Internet | 6045 · City Garage Expense | 141.37 |
| TOTAL | | | | | | 141.37 |
| **Bill Pmt -Ch...** | **07/31/2019** | **201908012** | **CP Energy {EFT} 528 0051** | | **100 · 4M 101/USB 2934 - General Fund** | **(23.80)** |
| Bill | 07/31/2019 | 073119 | 100 Gen'l Fd:B. Exp:B04 Bldgs & Land:6045 City Garage Expense | 3033 St Croix Trl S Meter: M20111533249 Acct# 5280051-3 | 6045 · City Garage Expense | 23.80 |
| TOTAL | | | | | | 23.80 |
| **Bill Pmt -Ch...** | **07/31/2019** | **201908013** | **CP Energy {EFT} 621 7601** | **Meter # M19702480474 Account No. 6217601-1** | **100 · 4M 101/USB 2934 - General Fund** | **(30.48)** |
| Bill | 07/31/2019 | 073119 | 100 Gen'l Fd:B. Exp:B04 Bldgs & Land:6045 City Garage Expense | 1675 Stagecoach Trl S: City Garage | 6045 · City Garage Expense | 30.48 |
| TOTAL | | | | | | 30.48 |
| **Bill Pmt -Ch...** | **07/31/2019** | **201908014** | **CP Energy {EFT} 1080 5248** | **Acct#10805248-1** | **100 · 4M 101/USB 2934 - General Fund** | **(20.26)** |
| Bill | 07/31/2019 | 073119 | 100 Gen'l Fd:B. Exp:B04 Bldgs & Land:6045 City Garage Expense | Acct#10805248-1 M20171727088 3033 St Croix Trl S Sheriff Garage (need... | 6045 · City Garage Expense | 20.26 |
| TOTAL | | | | | | 20.26 |
| **Bill Pmt -Ch...** | **07/31/2019** | **201908015** | **Neopost 2888 {EFT}** | **Acct # 7900 0440 8026 2888** | **100 · 4M 101/USB 2934 - General Fund** | **(987.21)** |
| Bill | 07/31/2019 | 073119 | 100 Gen'l Fd:B. Exp:B01 G & A:B1.4 Oth Exp:5550 Postage | Acct # 7900 0440 8026 2888 Postage PPLN01 | 5550 · Postage | 987.21 |
| TOTAL | | | | | | 987.21 |
| **Bill Pmt -Ch...** | **07/31/2019** | **201908016** | **Xcel Energy {EFT} (51-0895 3451)** | **Acct: 51-0895345-1 Meter# 000071246886** | **100 · 4M 101/USB 2934 - General Fund** | **(12.73)** |
| Bill | 07/31/2019 | 073119 | 805 City InfraStructure Imp Fd:B. Exp:8891 Dwntown Prop Purch/Exp | Eastwood - Septic Property 2318 St Croix Trl S Meter# 96987678 Premises... | 8891 · DNR Flood Imp - Prop Purch/Exp | 12.73 |
| TOTAL | | | | | | 12.73 |
| **Bill Pmt -Ch...** | **07/31/2019** | **201908017** | **Xcel Energy {EFT} (51-11957 7713)** | | **100 · 4M 101/USB 2934 - General Fund** | **(28.99)** |
| Bill | 07/31/2019 | 073119 | 100 Gen'l Fd:B. Exp:B03 Strts, Rehab & Pub Wks:B3.1 Streets:5850 Street Lighting | Acct No. 51-0011957771-3 : 3293 SAINT CROIX TRL S. Meter 7626901... | 5850 · Street Lighting | 28.99 |

# City of Afton
## Claims to be Approved
### July 17 through August 20, 2019

| Type | Date | Num | Name | Memo | Account | Original Amount |
|---|---|---|---|---|---|---|
| TOTAL | | | | | | 28.99 |
| **Bill Pmt -Ch...** | **07/31/2019** | **201908018** | **Xcel Energy {EFT} (51-11957 8190)** | | **100 · 4M 101/USB 2934 - General Fund** | **(958.73)** |
| Bill | 07/31/2019 | 073119 | 410 Sanitary Sewer Utility:B. Exp:6060 Sanitary Sewer Oper - Exp:6068 Electric - ... | Acct No. 51-00119578190 : Lift Station 15995 UPPER 34TH ST S. Meter ... | 6068 · Electricity - Lift Stations | 958.73 |
| TOTAL | | | | | | 958.73 |
| **Bill Pmt -Ch...** | **07/31/2019** | **201908019** | **Xcel Energy {EFT} (51-11983 9027)** | **Acct No. 51-0011983902-7** | **100 · 4M 101/USB 2934 - General Fund** | **(410.62)** |
| Bill | 07/31/2019 | 073119 | 410 Sanitary Sewer Utility:B. Exp:6060 Sanitary Sewer Oper - Exp:6068 Electric - ... | Acct No. 51-0011983902-7 Pumphouse for Water Treatment: 2318 St Croi... | 6068 · Electricity - Lift Stations | 410.62 |
| TOTAL | | | | | | 410.62 |
| **Bill Pmt -Ch...** | **07/31/2019** | **201908020** | **Xcel Energy {EFT} (51-5247 6229)** | **201 Project: 4105 River Rd Meter No. 0098359441** | **100 · 4M 101/USB 2934 - General Fund** | **(80.50)** |
| Bill | 07/31/2019 | 073119 | 400 201 Project Fund:B. Exp:5915 201 Project Maintenance | 201 Project: 4105 River Rd Meter No. 0098359441 | 5915 · 201 Project Maintenance | 80.50 |
| TOTAL | | | | | | 80.50 |
| **Bill Pmt -Ch...** | **07/31/2019** | **201908021** | **Xcel Energy {EFT} (51-5371 3569)** | **15891 34th St. S: Automatic Protective Lighting Service** | **100 · 4M 101/USB 2934 - General Fund** | **(5.57)** |
| Bill | 07/31/2019 | 073119 | 100 Gen'l Fd:B. Exp:B04 Bldgs & Land:6020 Electricity - Xcel Energy | 15891 34th St. S: Automatic Protective Lighting Service | 6020 · Electricity | 5.57 |
| TOTAL | | | | | | 5.57 |
| **Bill Pmt -Ch...** | **07/31/2019** | **201908022** | **Xcel Energy {EFT} (51-5700 4296)** | **Acct #51-5700429-6 Meter #0077765464** | **100 · 4M 101/USB 2934 - General Fund** | **(125.11)** |
| Bill | 07/31/2019 | 073119 | 100 Gen'l Fd:B. Exp:B04 Bldgs & Land:6020 Electricity - Xcel Energy | 3033 St. Croix Trail S Meter #77765464 Premises #303084797 City Hall &... | 6020 · Electricity | 125.11 |
| TOTAL | | | | | | 125.11 |
| **Bill Pmt -Ch...** | **07/31/2019** | **201908023** | **Xcel Energy {EFT} (51-6223 9212)** | **Acct No. 51-6223921-2 Street Lighting** | **100 · 4M 101/USB 2934 - General Fund** | **(37.77)** |
| Bill | 07/31/2019 | 073119 | 100 Gen'l Fd:B. Exp:B03 Strts, Rehab & Pub Wks:B3.1 Streets:5850 Street Lighting | Street Lighting Service | 5850 · Street Lighting | 37.77 |
| TOTAL | | | | | | 37.77 |
| **Bill Pmt -Ch...** | **07/31/2019** | **201908024** | **Xcel Energy {EFT} (51-6257 8029)** | **3420 St. Croix Trl S Meter #0096987678** | **100 · 4M 101/USB 2934 - General Fund** | **(27.27)** |
| Bill | 07/31/2019 | 073119 | 100 Gen'l Fd:B. Exp:B04 Bldgs & Land:6020 Electricity - Xcel Energy | Town Square Park 3420 St. Croix Trl S Meter #96987678 Premises 30332... | 6020 · Electricity | 27.27 |
| TOTAL | | | | | | 27.27 |
| **Bill Pmt -Ch...** | **07/31/2019** | **201908025** | **Xcel Energy {EFT} (51-6852 6052)** | **Acct #51-6852605-2 Install No. 184509 & 184508** | **100 · 4M 101/USB 2934 - General Fund** | **(8.79)** |
| Bill | 07/31/2019 | 073119 | 100 Gen'l Fd:B. Exp:B04 Bldgs & Land:6020 Electricity - Xcel Energy | Automatic Protective Light Service Install No. 184509 & 184508 | 6020 · Electricity | 8.79 |
| TOTAL | | | | | | 8.79 |
| **Bill Pmt -Ch...** | **07/31/2019** | **201908026** | **Xcel Energy {EFT} (51-7576 3714)** | **Acct#51-7576371-4 Meter #19818068** | **100 · 4M 101/USB 2934 - General Fund** | **(37.86)** |
| Bill | 07/31/2019 | 073119 | 100 Gen'l Fd:B. Exp:B04 Bldgs & Land:6045 City Garage Expense | City Garage 1675 Stagecoach Trl S: Acct#51-7576371-4 Meter #19818068 ... | 6045 · City Garage Expense | 37.86 |
| TOTAL | | | | | | 37.86 |
| **Bill Pmt -Ch...** | **07/31/2019** | **201908027** | **Xcel Energy {EFT} (51-0895 3451)** | **Acct: 51-0895345-1 Meter# 000071246886** | **100 · 4M 101/USB 2934 - General Fund** | **(20.59)** |

# City of Afton
## Claims to be Approved
### July 17 through August 20, 2019

| Type | Date | Num | Name | Memo | Account | Original Amount |
|---|---|---|---|---|---|---|
| Bill | 07/31/2019 | 073119 | 805 City InfraStructure Imp Fd:B. Exp:8891 Dwntown Prop Purch/Exp | Eastwood - Septic Property 2318 St Croix Trl S Meter# 96987678 Premises... | 8891 · DNR Flood Imp - Prop Purch/Exp | 20.59 |
| TOTAL | | | | | | 20.59 |
| **Bill Pmt -Ch...** | **07/31/2019** | **201908028** | **Xcel Energy {EFT} (51-11983 9027)** | **Acct No. 51-0011983902-7** | **100 · 4M 101/USB 2934 - General Fund** | **(852.51)** |
| Bill | 07/31/2019 | 073119 | 410 Sanitary Sewer Utility:B. Exp:6060 Sanitary Sewer Oper - Exp:6068 Electric - ... | Acct No. 51-0011983902-7 Pumphouse for Water Treatment: 2318 St Croi... | 6068 · Electricity - Lift Stations | 852.51 |
| TOTAL | | | | | | 852.51 |
| **Bill Pmt -Ch...** | **07/31/2019** | **201908029** | **Xcel Energy {EFT} (51-7576 3714)** | **Acct#51-7576371-4 Meter #19818068** | **100 · 4M 101/USB 2934 - General Fund** | **(35.45)** |
| Bill | 07/31/2019 | 073119 | 100 Gen'l Fd:B. Exp:B04 Bldgs & Land:6045 City Garage Expense | City Garage 1675 Stagecoach Trl S: Acct#51-7576371-4 Meter #19818068 ... | 6045 · City Garage Expense | 35.45 |
| TOTAL | | | | | | 35.45 |
| **Bill Pmt -Ch...** | **07/31/2019** | **201908030** | **US Bank {EFT} Equip Finance** | **Acct# 1473396 Contract # 500-0466085-000** | **100 · 4M 101/USB 2934 - General Fund** | **(230.00)** |
| Bill | 07/31/2019 | 073119 | 100 Gen'l Fd:B. Exp:B01 G & A:B1.4 Oth Exp:5516 Copier Lease | Ricoh C4503 copier lease S/N E175MC60291 | 5516 · Copier Lease | 230.00 |
| TOTAL | | | | | | 230.00 |
| **Paycheck** | **08/15/2019** | **201908031** | **Cernohous, Cole G** | **Direct Deposit** | **100 · 4M 101/USB 2934 - General Fund** | **0.00** |
| | | | 100 Gen'l Fd:B. Exp:B01 G & A:B1.1 Wages & Benefits:5020 Gen'l Maint Wages &... | Direct Deposit | 5020 · Maintenance Person | 144.00 |
| | | | 100 Gen'l Fd:B. Exp:B01 G & A:B1.1 Wages & Benefits:5020 Gen'l Maint Wages &... | Direct Deposit | 5051 · Social Security Tax - Employer | 8.93 |
| | | | | Direct Deposit | 2205 · Soc Sec Payable - Employer | (8.93) |
| | | | | Direct Deposit | 2204 · Social Security W/H - Employee | (8.93) |
| | | | 100 Gen'l Fd:B. Exp:B01 G & A:B1.1 Wages & Benefits:5020 Gen'l Maint Wages &... | Direct Deposit | 5052 · Medicare Tax - Employer | 2.09 |
| | | | | Direct Deposit | 2213 · Medicare Payable - Employer | (2.09) |
| | | | | Direct Deposit | 2212 · Medicare W/H - Employee | (2.09) |
| | | | | Direct Deposit | 2110 · Direct Deposit Liabilities | (132.98) |
| TOTAL | | | | | | 0.00 |
| **Paycheck** | **08/15/2019** | **201908032** | **Johnson, Kenneth L** | **Direct Deposit** | **100 · 4M 101/USB 2934 - General Fund** | **0.00** |
| | | | 100 Gen'l Fd:B. Exp:B01 G & A:B1.1 Wages & Benefits:5020 Gen'l Maint Wages &... | Direct Deposit | 5020 · Maintenance Person | 1,472.90 |
| | | | | Direct Deposit | 2302 · PERA Payable - Staff | (95.74) |
| | | | 100 Gen'l Fd:B. Exp:B01 G & A:B1.1 Wages & Benefits:5020 Gen'l Maint Wages &... | Direct Deposit | 5053 · PERA Contribution - Employer | 110.47 |
| | | | | Direct Deposit | 2302 · PERA Payable - Staff | (110.47) |
| | | | | Direct Deposit | 2210 · Federal Withholding | (138.00) |
| | | | 100 Gen'l Fd:B. Exp:B01 G & A:B1.1 Wages & Benefits:5020 Gen'l Maint Wages &... | Direct Deposit | 5051 · Social Security Tax - Employer | 91.32 |
| | | | | Direct Deposit | 2205 · Soc Sec Payable - Employer | (91.32) |
| | | | | Direct Deposit | 2204 · Social Security W/H - Employee | (91.32) |
| | | | 100 Gen'l Fd:B. Exp:B01 G & A:B1.1 Wages & Benefits:5020 Gen'l Maint Wages &... | Direct Deposit | 5052 · Medicare Tax - Employer | 21.36 |
| | | | | Direct Deposit | 2213 · Medicare Payable - Employer | (21.36) |
| | | | | Direct Deposit | 2212 · Medicare W/H - Employee | (21.36) |
| | | | | Direct Deposit | 2208 · MN State Withholding | (71.00) |
| | | | | Direct Deposit | 2110 · Direct Deposit Liabilities | (1,055.48) |
| TOTAL | | | | | | 0.00 |
| **Paycheck** | **08/15/2019** | **201908033** | **Meade, Debra J** | **Direct Deposit** | **100 · 4M 101/USB 2934 - General Fund** | **0.00** |
| | | | 100 Gen'l Fd:B. Exp:B01 G & A:B1.1 Wages & Benefits:5007 Intern/Office Asst W... | Direct Deposit | 5007 · Intern/Office Assistant Wages | 1,297.80 |
| | | | | Direct Deposit | 2302 · PERA Payable - Staff | (84.36) |
| | | | 100 Gen'l Fd:B. Exp:B01 G & A:B1.1 Wages & Benefits:5007 Intern/Office Asst W... | Direct Deposit | 5053 · PERA Contribution - Employer | 97.34 |
| | | | | Direct Deposit | 2302 · PERA Payable - Staff | (97.34) |
| | | | | Direct Deposit | 2210 · Federal Withholding | (132.00) |
| | | | 100 Gen'l Fd:B. Exp:B01 G & A:B1.1 Wages & Benefits:5007 Intern/Office Asst W... | Direct Deposit | 5051 · Social Security Tax - Employer | 80.47 |

# City of Afton
## Claims to be Approved
### July 17 through August 20, 2019

| Type | Date | Num | Name | Memo | Account | Original Amount |
|---|---|---|---|---|---|---|
| | | | | Direct Deposit | 2205 · Soc Sec Payable - Employer | (80.47) |
| | | | | Direct Deposit | 2204 · Social Security W/H - Employee | (80.47) |
| | | | 100 Gen'l Fd:B. Exp:B01 G & A:B1.1 Wages & Benefits:5007 Intern/Office Asst W... | Direct Deposit | 5052 · Medicare Tax - Employer | 18.82 |
| | | | | Direct Deposit | 2213 · Medicare Payable - Employer | (18.82) |
| | | | | Direct Deposit | 2212 · Medicare W/H - Employee | (18.82) |
| | | | | Direct Deposit | 2208 · MN State Withholding | (65.00) |
| | | | | Direct Deposit | 2110 · Direct Deposit Liabilities | (75.00) |
| | | | | Direct Deposit | 2110 · Direct Deposit Liabilities | (842.15) |
| TOTAL | | | | | | 0.00 |
| **Paycheck** | **08/15/2019** | **201908034** | **Pahl, Thomas W** | **Direct Deposit** | **100 · 4M 101/USB 2934 - General Fund** | **0.00** |
| | | | 100 Gen'l Fd:B. Exp:B01 G & A:B1.1 Wages & Benefits:5020 Gen'l Maint Wages &... | Direct Deposit | 5020 · Maintenance Person | 531.77 |
| | | | | Direct Deposit | 2302 · PERA Payable - Staff | (34.57) |
| | | | 100 Gen'l Fd:B. Exp:B01 G & A:B1.1 Wages & Benefits:5020 Gen'l Maint Wages &... | Direct Deposit | 5053 · PERA Contribution - Employer | 39.88 |
| | | | | Direct Deposit | 2302 · PERA Payable - Staff | (39.88) |
| | | | 100 Gen'l Fd:B. Exp:B01 G & A:B1.1 Wages & Benefits:5020 Gen'l Maint Wages &... | Direct Deposit | 5051 · Social Security Tax - Employer | 32.97 |
| | | | | Direct Deposit | 2205 · Soc Sec Payable - Employer | (32.97) |
| | | | | Direct Deposit | 2204 · Social Security W/H - Employee | (32.97) |
| | | | 100 Gen'l Fd:B. Exp:B01 G & A:B1.1 Wages & Benefits:5020 Gen'l Maint Wages &... | Direct Deposit | 5052 · Medicare Tax - Employer | 7.72 |
| | | | | Direct Deposit | 2213 · Medicare Payable - Employer | (7.72) |
| | | | | Direct Deposit | 2212 · Medicare W/H - Employee | (7.72) |
| | | | | Direct Deposit | 2208 · MN State Withholding | (2.00) |
| | | | | Direct Deposit | 2110 · Direct Deposit Liabilities | (454.51) |
| TOTAL | | | | | | 0.00 |
| **Paycheck** | **08/15/2019** | **201908035** | **Yoho, Julie D** | **Direct Deposit** | **100 · 4M 101/USB 2934 - General Fund** | **0.00** |
| | | | 100 Gen'l Fd:B. Exp:B01 G & A:B1.1 Wages & Benefits:5008 Office Manager Wag... | Direct Deposit | 5008 · Office Manager Wages | 2,405.73 |
| | | | | Direct Deposit | 2302 · PERA Payable - Staff | (156.37) |
| | | | 100 Gen'l Fd:B. Exp:B01 G & A:B1.1 Wages & Benefits:5008 Office Manager Wag... | Direct Deposit | 5053 · PERA Contribution - Employer | 180.43 |
| | | | | Direct Deposit | 2302 · PERA Payable - Staff | (180.43) |
| | | | | Direct Deposit | 2210 · Federal Withholding | (174.00) |
| | | | 100 Gen'l Fd:B. Exp:B01 G & A:B1.1 Wages & Benefits:5008 Office Manager Wag... | Direct Deposit | 5051 · Social Security Tax - Employer | 149.15 |
| | | | | Direct Deposit | 2205 · Soc Sec Payable - Employer | (149.15) |
| | | | | Direct Deposit | 2204 · Social Security W/H - Employee | (149.15) |
| | | | 100 Gen'l Fd:B. Exp:B01 G & A:B1.1 Wages & Benefits:5008 Office Manager Wag... | Direct Deposit | 5052 · Medicare Tax - Employer | 34.88 |
| | | | | Direct Deposit | 2213 · Medicare Payable - Employer | (34.88) |
| | | | | Direct Deposit | 2212 · Medicare W/H - Employee | (34.88) |
| | | | | Direct Deposit | 2208 · MN State Withholding | (92.00) |
| | | | | Direct Deposit | 2110 · Direct Deposit Liabilities | (1,799.33) |
| TOTAL | | | | | | 0.00 |
| **Paycheck** | **08/15/2019** | **201908036** | **Moorse, Ronald J** | **Direct Deposit** | **100 · 4M 101/USB 2934 - General Fund** | **0.00** |
| | | | 100 Gen'l Fd:B. Exp:B01 G & A:B1.1 Wages & Benefits:5004 Administrator Wages... | Direct Deposit | 5004 · Administrator Salary | 4,129.17 |
| | | | 100 Gen'l Fd:B. Exp:B01 G & A:B1.1 Wages & Benefits:5004 Administrator Wages... | Direct Deposit | 5053 · PERA Contribution - Employer | 309.69 |
| | | | | Direct Deposit | 2302 · PERA Payable - Staff | (309.69) |
| | | | | Direct Deposit | 2302 · PERA Payable - Staff | (268.40) |
| | | | 100 Gen'l Fd:B. Exp:B01 G & A:B1.1 Wages & Benefits:5004 Administrator Wages... | Direct Deposit | 5037 · Flexible Benefits | 1,155.50 |
| | | | | Direct Deposit | 2210 · Federal Withholding | (1,100.00) |
| | | | 100 Gen'l Fd:B. Exp:B01 G & A:B1.1 Wages & Benefits:5004 Administrator Wages... | Direct Deposit | 5051 · Social Security Tax - Employer | 327.65 |
| | | | | Direct Deposit | 2205 · Soc Sec Payable - Employer | (327.65) |
| | | | | Direct Deposit | 2204 · Social Security W/H - Employee | (327.65) |
| | | | 100 Gen'l Fd:B. Exp:B01 G & A:B1.1 Wages & Benefits:5004 Administrator Wages... | Direct Deposit | 5052 · Medicare Tax - Employer | 76.63 |
| | | | | Direct Deposit | 2213 · Medicare Payable - Employer | (76.63) |
| | | | | Direct Deposit | 2212 · Medicare W/H - Employee | (76.63) |
| | | | | Direct Deposit | 2208 · MN State Withholding | (300.00) |
| | | | | Direct Deposit | 2110 · Direct Deposit Liabilities | (3,211.99) |

# City of Afton
## Claims to be Approved
### July 17 through August 20, 2019

| Type | Date | Num | Name | Memo | Account | Original Amount |
|---|---|---|---|---|---|---|
| TOTAL | | | | | | 0.00 |
| **Paycheck** | **08/15/2019** | **201908037** | **Palmquist, William B** | **Direct Deposit** | **100 · 4M 101/USB 2934 - General Fund** | **0.00** |
| | | | 100 Gen'l Fd:B. Exp:B01 G & A:B1.1 Wages & Benefits:5002 Mayor & Council Wa... | Direct Deposit | 5002 · Mayor & Council Wages | 300.00 |
| | | | | Direct Deposit | 2303 · PERA Payable - Council | (15.00) |
| | | | 100 Gen'l Fd:B. Exp:B01 G & A:B1.1 Wages & Benefits:5002 Mayor & Council Wa... | Direct Deposit | 5053 · PERA Contribution - Employer | 15.00 |
| | | | | Direct Deposit | 2303 · PERA Payable - Council | (15.00) |
| | | | 100 Gen'l Fd:B. Exp:B01 G & A:B1.1 Wages & Benefits:5002 Mayor & Council Wa... | Direct Deposit | 5052 · Medicare Tax - Employer | 4.35 |
| | | | | Direct Deposit | 2213 · Medicare Payable - Employer | (4.35) |
| | | | | Direct Deposit | 2212 · Medicare W/H - Employee | (4.35) |
| | | | | Direct Deposit | 2110 · Direct Deposit Liabilities | (280.65) |
| TOTAL | | | | | | 0.00 |
| **Paycheck** | **08/15/2019** | **201908038** | **Perkins, Anne E** | **Direct Deposit** | **100 · 4M 101/USB 2934 - General Fund** | **0.00** |
| | | | 100 Gen'l Fd:B. Exp:B01 G & A:B1.1 Wages & Benefits:5002 Mayor & Council Wa... | Direct Deposit | 5002 · Mayor & Council Wages | 200.00 |
| | | | | Direct Deposit | 2303 · PERA Payable - Council | (10.00) |
| | | | 100 Gen'l Fd:B. Exp:B01 G & A:B1.1 Wages & Benefits:5002 Mayor & Council Wa... | Direct Deposit | 5053 · PERA Contribution - Employer | 10.00 |
| | | | | Direct Deposit | 2303 · PERA Payable - Council | (10.00) |
| | | | 100 Gen'l Fd:B. Exp:B01 G & A:B1.1 Wages & Benefits:5002 Mayor & Council Wa... | Direct Deposit | 5052 · Medicare Tax - Employer | 2.90 |
| | | | | Direct Deposit | 2213 · Medicare Payable - Employer | (2.90) |
| | | | | Direct Deposit | 2212 · Medicare W/H - Employee | (2.90) |
| | | | | Direct Deposit | 2110 · Direct Deposit Liabilities | (187.10) |
| TOTAL | | | | | | 0.00 |
| **Paycheck** | **08/15/2019** | **201908039** | **Ross, Stanley A** | **Direct Deposit** | **100 · 4M 101/USB 2934 - General Fund** | **0.00** |
| | | | 100 Gen'l Fd:B. Exp:B01 G & A:B1.1 Wages & Benefits:5002 Mayor & Council Wa... | Direct Deposit | 5002 · Mayor & Council Wages | 200.00 |
| | | | | Direct Deposit | 2303 · PERA Payable - Council | (10.00) |
| | | | 100 Gen'l Fd:B. Exp:B01 G & A:B1.1 Wages & Benefits:5002 Mayor & Council Wa... | Direct Deposit | 5053 · PERA Contribution - Employer | 10.00 |
| | | | | Direct Deposit | 2303 · PERA Payable - Council | (10.00) |
| | | | 100 Gen'l Fd:B. Exp:B01 G & A:B1.1 Wages & Benefits:5002 Mayor & Council Wa... | Direct Deposit | 5052 · Medicare Tax - Employer | 2.90 |
| | | | | Direct Deposit | 2213 · Medicare Payable - Employer | (2.90) |
| | | | | Direct Deposit | 2212 · Medicare W/H - Employee | (2.90) |
| | | | | Direct Deposit | 2110 · Direct Deposit Liabilities | (187.10) |
| TOTAL | | | | | | 0.00 |
| **Paycheck** | **08/15/2019** | **201908040** | **Wroblewski, Lucia B** | **Direct Deposit** | **100 · 4M 101/USB 2934 - General Fund** | **0.00** |
| | | | 100 Gen'l Fd:B. Exp:B01 G & A:B1.1 Wages & Benefits:5002 Mayor & Council Wa... | Direct Deposit | 5002 · Mayor & Council Wages | 200.00 |
| | | | 100 Gen'l Fd:B. Exp:B01 G & A:B1.1 Wages & Benefits:5002 Mayor & Council Wa... | Direct Deposit | 5053 · PERA Contribution - Employer | 10.00 |
| | | | | Direct Deposit | 2303 · PERA Payable - Council | (10.00) |
| | | | | Direct Deposit | 2303 · PERA Payable - Council | (10.00) |
| | | | 100 Gen'l Fd:B. Exp:B01 G & A:B1.1 Wages & Benefits:5002 Mayor & Council Wa... | Direct Deposit | 5052 · Medicare Tax - Employer | 2.90 |
| | | | | Direct Deposit | 2213 · Medicare Payable - Employer | (2.90) |
| | | | | Direct Deposit | 2212 · Medicare W/H - Employee | (2.90) |
| | | | | Direct Deposit | 2110 · Direct Deposit Liabilities | (187.10) |
| TOTAL | | | | | | 0.00 |
| **Liability Che...** | **08/14/2019** | **201908041** | **QuickBooks Payroll Service** | **Created by Payroll Service on 08/09/2019** | **100 · 4M 101/USB 2934 - General Fund** | **(8,430.89)** |
| | | | 100 Gen'l Fd:B. Exp:B01 G & A:B1.4 Oth Exp:5505 Bank/IRS Fees/Sales Tax | Fee for 10 direct deposit(s) at $1.75 each | 5505 · Bank/IRS/Sales Tax | 17.50 |
| | | | QuickBooks Payroll Service | Created by Payroll Service on 08/09/2019 | 2110 · Direct Deposit Liabilities | 8,413.39 |
| TOTAL | | | | | | 8,430.89 |

# City of Afton
## Claims to be Approved
### July 17 through August 20, 2019

| Type | Date | Num | Name | Memo | Account | Original Amount |
|---|---|---|---|---|---|---|
| **Liability Che...** | **08/15/2019** | **201908042** | **PERA (Staff)** | **3030-01 210990** | **100 · 4M 101/USB 2934 - General Fund** | **(1,377.25)** |
| | | | | 3030-01 210990 | 2302 · PERA Payable - Staff | 639.44 |
| | | | | 3030-01 210990 | 2302 · PERA Payable - Staff | 737.81 |
| TOTAL | | | | | | 1,377.25 |
| **Liability Che...** | **08/15/2019** | **201908043** | **PERA (Council)** | **3030-51 207620** | **100 · 4M 101/USB 2934 - General Fund** | **(110.00)** |
| | | | | 3030-51 207620 | 2303 · PERA Payable - Council | 55.00 |
| | | | | 3030-51 207620 | 2303 · PERA Payable - Council | 55.00 |
| TOTAL | | | | | | 110.00 |
| **Liability Che...** | **08/15/2019** | **201908044** | **IRS (US Treasury)** | **41-1290668** | **100 · 4M 101/USB 2934 - General Fund** | **(3,279.88)** |
| | | | | 41-1290668 | 2210 · Federal Withholding | 1,544.00 |
| | | | | 41-1290668 | 2213 · Medicare Payable - Employer | 177.45 |
| | | | | 41-1290668 | 2212 · Medicare W/H - Employee | 177.45 |
| | | | | 41-1290668 | 2205 · Soc Sec Payable - Employer | 690.49 |
| | | | | 41-1290668 | 2204 · Social Security W/H - Employee | 690.49 |
| TOTAL | | | | | | 3,279.88 |
| **Liability Che...** | **08/15/2019** | **201908045** | **MN Dept of Revenue** | **5050730** | **100 · 4M 101/USB 2934 - General Fund** | **(530.00)** |
| | | | | 5050730 | 2208 · MN State Withholding | 530.00 |
| TOTAL | | | | | | 530.00 |
| **Bill Pmt -Ch...** | **08/20/2019** | **201908046** | **Minnesota Public Facilities Authority** | **Afton cw01 & cw02** | **100 · 4M 101/USB 2934 - General Fund** | **(122,015.85)** |
| Bill | 08/20/2019 | PFALoans 8/2... | 806 PFA Loan Debt Serv:7744 2017 L054 Storm Wtr PFA Int Exp | PFA Interest: Stormwater MPFA CWRF L 054 FY17 | 7744 · 2017 Storm Wtr PFA Interest Exp | 4,830.71 |
| | | | 806 PFA Loan Debt Serv:7754 2017 L054 Storm Wtr PFA Principal | PFA Principal: Stormwater MPFA CWRF L 054 FY17 | 7754 · 2017 L054 Storm Wtr PFA Princpl | 52,000.00 |
| | | | 806 PFA Loan Debt Serv:7745 2017 L055 Sanitary Sewer PFA Int Exp | PFA Interest: Sanitary Sewer MPFA CWRF L 055 FY17 | 7745 · 2017 L055 Sanit Swr PFA Int Exp | 6,185.14 |
| | | | 806 PFA Loan Debt Serv:7755 2017 L055 Sanitary Sewer PFA Princpl | PFA Principal: Sanitary Sewer MPFA CWRF L 055 FY17 | 7755 · 2017 L055 Sanit Swr PFA Princpl | 59,000.00 |
| TOTAL | | | | | | 122,015.85 |

# *City of Afton*
## *Exhibit A: 4M Fund Transfers*

| | A | B | C | D | E |
|---|---|---|---|---|---|
| 1 | | | | **Month of:** | **Jul-19** |
| 2 | | **4M Fund Accounts** | | | |
| 3 | # | ***From*** | ***To*** | ***Amount*** | ***Comments*** |
| 4 | 1 | 805 - 4M114 City Infra-Structure Improvement Fund | 100 - 4M101 General | $9,212.32 | 805 Downtown Project Expenses |
| 5 | 2 | 100 - 4M101 General | 560 · 4M119 - Spec Activities Other | $1,028.00 | Revenue: 550 Special Act - General |
| 6 | 3 | 550 · 4M106 - Spec Activities General | 100 - 4M101 General | $178.41 | Expenses: 550 Special Act - General |
| 7 | 4 | 560 · 4M119 - Spec Activities Other | 100 - 4M101 General | $6,889.92 | Expenses: 560 Special Act - Other |
| 8 | 5 | 100 - 4M101 General | 410 · 4M118 - Sanitary Sewer | $5,140.00 | 410 Sanitary Sewer Utility - Revenue |
| 9 | 6 | 410 · 4M118 - Sanitary Sewer | 100 - 4M101 General | $3,520.79 | 410 Sanitary Sewer Utility - Expenses |
| 10 | 7 | 100 - 4M101 General | 200 Park Reserve Fund (35001-102) | $10,000.00 | 200 Park Reserve Dedication Fee |
| 11 | 8 | 200 Park Reserve Fund (35001-102) | 100 General (35001-101) | $10,012.75 | 200 Park Reserve Expense |
| 12 | 9 | 120 · 4M116 - Street Improvement | 100 - 4M101 General | $8,943.04 | 120 Street Imp Fd Expenses |
| 13 | 10 | 201 - 4M103 201 Project Fund | 100 - 4M101 General | $80.50 | 201 Project Expense |
| 14 | 11 | 806 · 4M122 - PFA Loan Debt Serv | 100 - 4M101 General | $10,320.00 | 806 PFA Loan/Assessment Expenses |
| 15 | 12 | 725 2014A Road Debt Service Fd (35001-109) | 100 General (35001-101) | $40,350.00 | 8/1/19 2014A Road Bond Payment |
| 16 | 13 | 726 2017B Road Debt Service Fd | 100 General (35001-101) | $33,687.50 | 8/1/19 2017B Road Bond Payment |
| 17 | | | | | |

Recommended by Thomas H. Niedzwiecki, Accountant
File: Afton 2019 Bank Transfers.xlsm Worksheet: Jul19 8/14/2019

**RESOLUTION 2019-31**

CITY OF AFTON
WASHINGTON COUNTY, MINNESOTA

**A RESOLUTION APPROVING 4M FUND TRANSFERS FOR JULY OF 2019**

**BE IT RESOLVED THAT** the City Council of the City of Afton, County of Washington, Minnesota, authorizes the transfer of the following sums of money between the City's 4M Fund Accounts, as detailed in Exhibit A – 4M Fund Transfers – Month of JULY, 2019.

**ADOPTED BY THE CITY COUNCIL OF THE CITY OF AFTON THIS 20TH DAY OF AUGUST, 2019.**

**SIGNED:**

_____

Bill Palmquist, Mayor

**ATTEST:**

_____

Ronald J. Moorse, City Administrator

Motion by:
Second by:
Ross:
Nelson:
Wroblewski:
Perkins:
Palmquist:

**CITY OF AFTON**
**DRAFT PLANNING COMMISSION MINUTES**
**August 5, 2019**

1. **CALL TO ORDER –** Chair Kopitzke called the meeting to order at 7:00 PM

2. **PLEDGE OF ALLEGIANCE** – was recited.

3. **ROLL CALL** – Present: Chair Kris Kopitzke, Christian Dawson, Kuchen Hale, James Langan, Roger Bowman, Doug Parker. A Quorum was present. Absent were Sally Doherty, Scott Patten, & Justin Sykora (all excused).
**ALSO IN ATTENDANCE –** Council member Wroblewski, City Administrator Ron Moorse

4. **APPROVAL OF AGENDA –**
**Motion/Second Bowman/Parker To approve the Agenda of the August 5, 2019 Planning Commission meeting. Passed 6-0.**

5. **APPROVAL OF MINUTES –**
**A.** July 1, 2019
**Motion/Second Parker/Kopitzke To approve the minutes of the July 1, 2019 Planning Commission meeting. Passed 6-0**

**B.** July 8, 2019
**Motion/Second Bowman/Parker to approve minutes of the July 8, 2019 Planning Commission meeting. Passed 4-0-2 9 (Hale, Parker abstain)**

6. **REPORTS AND PRESENTATIONS** - None

7. **PUBLIC HEARINGS –**
A. Kathy & David Boisjoli Application for Application for an Ordinance Amendment Regarding a Private Riding Stable with Equine-Assisted Mental Health Therapy and an Application for a Conditional Use Permit for Equine-Assisted Mental Health Therapy at a Private Riding Stable at 15489 45th Street

Chair Kopitzke opened the Public Hearing at 7:06 pm
Administrator Moorse provided a summary of the application and the direction from the city council.
Krista Dorgan, Neighbor of border property, stated she is supportive of the business.
No other comments were received.
**Motion/Second Hale/Dawson to close public hearing. Passed 6-0**
Public Hearing closed at 7:10 pm
Hale asked why the restriction is for only mental health therapy?
Kopitzke stated he also would like it to be broader, such as home based licensed professional.
Parker expressed concern about changing the ordinance, buyers should research prior to purchasing property rather than coming in later to change.
Kopitzke noted the difference between a variance request and broader approach of ordinance change.
Hale stated this language is so specific, would prefer broader definition.
Moorse recommended keeping the equine assisted language since it is a private stable; therapy can be broader
Bowman also likes broadening the language. There are certifications and licenses required.
Dawson stated that if licensed by the state board, there is minimum training required, we do not need to define.
Langan asked if this can be done without an ordinance change?
Moorse replied that we have a home occupation ordinance that allows a therapy office in-home, in principal structure – this happens outside or in stable.
Langan stated that people have workshops in outbuildings. If property were zoned AG the use would fit.
Bowman replied that was discussed last time; can't rezone because not contiguous to other AG properties, would be spot zoning.
Kopitzke stated this is a home occupied business with a riding stable. Sticking point is business in principal structure language.

Dawson stated we are just adding on to the list of acceptable uses.
Hale stated we can address in the CUP.
Bowman stated that boarding opens up to commercial use not allowed in RR.
Langan stated that therapy sounds commercial.
Hale stated that the use aligns with AG.
Langan stated we don't want to encourage future abuse with what we set up. Feels like spot zoning.
Hale stated that there is a CUP; take each application as it comes.
Parker agreed with Langan's opinion.

**Motion/Second Bowman/Kopitzke to recommend approval of the ordinance amendment to change permitted use in the Rural Residential zone to allow a private riding stable with equine-assisted therapy with the following language: "The private riding stable shall be owned and operated by a professional licensed by a Board of the State of MN in the appropriate sub-specialty." Passed 5-1 (Parker Nay).**

**Motion/Second Bowman/Hale to recommend approval of the Conditional Use Permit with the following changes: replace "certified by the" to "permitted to practice"; condition #2 add "riding stable and pasture". Passed 5-1 (Parker nay).**

8. **NEW BUSINESS** – none

9. **OLD BUSINESS –**

A. Review & clarification of elements of PLCD ordinance language
Administrator Moorse will prepare a draft of changes for feedback
Shared driveways
Kopitzke stated that if we allow shared driveways we should require a maintenance agreement so that issues don't come to the city.
Parker asked which method allows for more control by the city? PLCD or shared driveway?
Moorse replied that PLCD lots are a minimum 5 acres and 50% space is protected. Shared driveway would allow larger lots without the large open space being preserved.
Hale stated that they can provide access to lots and keep large open tracts, keeps development off the road.
Parker stated that the city council could allow development at a future point, PLCD makes it tougher.
Dawson stated there could be a stipulation of an easement that has to be multi-party held.
Langan stated that eventually these driveways could develop into roads, need language to limit.
Bowman stated there should be a maximum number allowed per driveway.
Parker stated there is a safety issue of multiple homes on a narrow long driveway for fire and emergency services.
Hale & Kopitzke both agreed that a maintenance agreement approved by the city as part of CUP process should be required.
Kopitzke stated there should be a limit on the number of homes.
Hale stated it is another option/complementary to PLCD.
Kopitzke summarized the following key points: maintenance agreement, multi-party legal way to prevent further sub-division, limit number of residences, park donation requirement, and minimum width depending on residence numbers.

B. Update on City Council actions
Council member Wroblewski provided a summary of the July City Council meeting.

10. **ADJOURN**

**Motion/Second Parker/Dawson To adjourn. Passed 6-0.**

Meeting adjourned at 8:35 p.m.

Respectfully submitted by:

_____

Julie Yoho, City Clerk

**To be approved on September 9, 2019 as (check one): Presented: _____ or Amended: _____**

DRAFT

**City of Afton**
**3033 St. Croix Trl, P.O. Box 219**
**Afton, MN 55001**

# Meeting Date August 20, 2019

# Council Action Memo

To: Mayor Palmquist and City Council Members

From: Ron Moorse, City Administrator

Date: August 12, 2019

Re: Kathy and David Boisjoli Application for an Ordinance Amendment to Allow a Private Riding Stable with Equine-Assisted Therapy and an Application for a Conditional Use Permit for Equine-Assisted Therapy at a Private Riding Stable at 15489 45th Street– **Ordinance 04-2019 and Resolution 2019-32**

---

Kathy Boisjoli and three other therapists have been providing equine-assisted psychotherapy at a rented farm with a stable in Woodbury. Each therapist has horses that have been boarded at the stable and used for the equine-assisted therapy. The Boisjolis have purchased a 20-acre farm with a stable at 15489 45th Street with the plan to board the horses and continue the equine-assisted therapy in Afton. Because the property at 15489 45th street is zoned Rural Residential, a commercial riding stable is not allowed. While private riding stables are allowed as a conditional use in both the Agricultural and Rural Residential zoning districts and commercial riding stables are allowed as a conditional use in the Agricultural zoning district, commercial riding stables are not allowed in the Rural Residential zoning district.

The Boisjolis had originally applied for an ordinance amendment to allow a small commercial riding stable in the Rural Residential zone, and to allow equine-assisted mental health therapy as part of the riding stable use. Both the Planning Commission and the City Council had concerns about allowing a commercial riding stable use in the Rural Residential zone. However, they also believed the equine assisted mental health therapy use was a good fit with Afton's rural, agricultural character, as well as with the private riding stable use in the Rural Residential zone. The Planning Commission recommended a revised ordinance amendment to allow equine assisted mental health therapy as an activity on a property with a private riding stable (on a property of a minimum of 20 acres), if a licensed professional clinical counselor owns and resides at the property, operates the riding stable and provides equine-assisted mental health therapy on the property.

Planning Commission Discussion

The Planning Commission was concerned about the narrowness of the ordinance amendment, in that it was only applicable to equine-assisted psychotherapy, and agreed it should be broadened to include other equine-assisted therapies, such as rehabilitation therapy. Also, based on the broadening of the amendment and information from the applicant that clarified licensure and certification requirements, the Commission agreed the performance standards related to the equine-assisted therapy should be broadened to require licensure by a Minnesota professional licensing board and training as required to practice the appropriate subspecialty. The ordinance has been revised to reflect these requirements.

Attached are a revised ordinance amendment to allow a private riding stable with equine-assisted therapy, an updated conditional use permit application to reflect the revised ordinance amendment, and a revised letter from Healing Lives Counseling regarding a revised conditional use permit application.

**Ordinance Amendment**

The attached ordinance amendment (Ordinance 04-2019) has three elements.

1. Add language to Sec. 12-134. Uses that indicates conditionally permitted uses may be subject to performance standards set out in Chapter 12, Division 4. Design and Performance Standards
2. Add a new use to Sec. 12-134. Uses as follows: Riding stable, private, with equine-assisted therapy (minimum of 20 acres)
3. Revise Division 4, Sec. 12-187. Types of accessory buildings to add the following performance standards for private riding stables with equine-assisted therapy:
    1. The riding stable shall be owned and operated by a health professional who resides at the property and who has licensure by a professional licensing board of the State of Minnesota and training as required to practice the appropriate therapy subspecialty.

Findings

The following are recommended findings. The Council may revise or add findings.

1. The equine-assisted therapy use is compatible with Afton's rural, agricultural character, as well as with the private riding stable use in the Rural Residential zone.
2. Private riding stables are allowed as a conditional use in the Agricultural and Rural Residential zoning districts.
3. The impacts of the activities related to the equine-assisted mental health therapy are similar to the impacts of other activities allowed at a riding stable, such as riding of horses, training of horses and riders and boarding of horses.
4. The riding stable is owned and operated by a licensed professional clinical counselor who resides at the property and is certified by the Minnesota Board of Behavioral Health and Therapy and has the necessary training to practice equine-assisted mental health therapy.

Planning Commission Recommendation

The Planning Commission, on a vote of 5-1-0, recommended approval of the ordinance amendment based on the findings listed above.

**Conditional Use Permit Application**

The conditional use permit application proposes a private riding stable with equine-assisted mental health therapy. The riding stable is owned and operated by a licensed clinical counselor who resides at the property and has the necessary training to practice equine-assisted mental health therapy. Three additional counselors would also provide equine-assisted mental health therapy at the property. The hours of operation are proposed to be Monday 9-5, Tuesday 9-5, Wednesday 9-6, Thursday 9-7 and Friday 9-5. Based on the amount of natural pasture land on the property, it appears that up to nine horses could be boarded on the property. The property has an existing riding stable with boarding stalls. The riding stable has its own septic system and sanitation facilities, however, the riding stable septic system is noncompliant and the County is requiring that the system be abandoned. If the sanitary facilities in the stable are to be used, either a new septic system needs to be provided or, if the septic system serving the house is adequately sized, a connection needs to be made to the septic system serving the house.

Planning Commission Discussion and Recommendation

Based on the broadening of the ordinance amendment and information from the applicant that clarified licensure and certification requirements, the Commission agreed the performance standards related to the equine-assisted therapy should be broadened to require licensure by a professional licensing board of the State of Minnesota and training as required to practice the appropriate subspecialty. The Planning Commission also agreed that all horses boarded at the private riding stable must be owned by the owner of the property and/or used to provide equine-assisted therapy.

The Planning Commission, on a vote of 5-1-0, recommended approval of the conditional use permit based on the findings listed below and with the conditions listed below.

Findings

The following are recommended findings. The Council may revise or add findings.

1. The subject property is zoned Rural Residential. The surrounding properties are zoned Rural Residential
2. The property is 20 acres in size, which is the minimum size required for a riding stable.
3. The riding stable is owned and operated by a licensed professional clinical counselor who resides at the property and is licensed by the Minnesota Board of Behavioral Health and Therapy and has the training required to practice equine-assisted psychotherapy.
4. The impacts of the activities related to the equine-assisted mental health therapy are similar to the impacts of other activities allowed at a riding stable, such as riding of horses, training of horses and riders and boarding of horses
5. The property has an existing riding stable with boarding stalls.
6. The riding stable has its own septic system and sanitation facilities. However, the septic system is noncompliant.
7. No new structures or expansion of existing structures are proposed.

Conditions

1. Hours of operation shall not exceed Monday 9-5, Tuesday 9-5, Wednesday 9-6, Thursday 9-7 and Friday 9-5.
2. The riding stable and required pastureland shall continue to be owned and operated by a health professional who resides at the property and who has licensure by a professional licensing board of the State of Minnesota and training as required to practice the appropriate equine-assisted therapy subspecialty.
3. All horses boarded at the private riding stable must be owned by the owner of the property and/or used to provide equine-assisted therapy.
4. If the sanitary facilities in the stable are to be used, either a new septic system needs to be provided or, if the septic system serving the house is adequately sized, a connection needs to be made to the septic system serving the house.
5. An Amended Conditional Use Permit shall be required for any future expansions or alterations.
6. Design, location, and specifications of any signs shall conform to the Afton Sign Ordinance. All signs shall require a permit to be issued by the Zoning Administrator.
7. The number of horses allowed to be boarded is based on the number of acres of natural pasture land.
8. Any lighting shall conform to Afton's ordinances
9. Non-compliance with the conditions of this permit shall be considered a violation and will result in revocation of this permit.

Resolutions

Attached are a resolution of approval reflecting the Planning Commission's recommendation and a resolution of denial, for the Council's consideration.

**COUNCIL ACTION REQUESTED:**

1. **Motion regarding Ordinance 04-2019, an Ordinance Amendment to allow a Private Riding Stable with Equine-Assisted Therapy as a conditional use in the Rural Residential and Agricultural districts.**
2. **Motion regarding the adoption of Resolution 2019-32 regarding the Boisjoli application for a Conditional Use Permit for a private riding stable with equine-assisted therapy at 15489 45th Street, including findings, and conditions if applicable.**

# ORDINANCE 04-2019

CITY OF AFTON

WASHINGTON COUNTY, MINNESOTA

AN ORDINANCE AMENDING CHAPTER 12, SECTION 12-134 AND SECTION 12-187 TO ALLOW PRIVATE RIDING STABLES WITH EQUINE-ASSISTED MENTAL HEALTH THERAPY AS A CONDITIONAL USE IN THE AGRICULTURAL AND RURAL RESIDENTIAL ZONES WITH PERFORMANCE STANDARDS

THE CITY COUNCIL OF THE CITY OF AFTON, MINNESOTA HEREBY ORDAINS:

The following sections of the Afton Code of Ordinances shall be amended by adding the **bold and underlined** language and deleting the strike-through language.

Sec. 12-134 Uses

| | |
|---|---|
| P | = Permitted use |
| A | = Permitted accessory use |
| A/C | = Permitted accessory, conditional use permit |
| C | = Conditionally Permitted Use |
| I | = Interim Use Permit[90] |
| ADMIN | = Administrative Permit Required |
| N | = Not allowed |
| * | = Except as otherwise noted |
| ** | **= Conditionally permitted uses may be subject to performance standards set out in Chapter 12, Division 4, Design and Performance Standards** |

| | Agricultural (A) | Rural Residential (R) | VHS-Residential (VHS-) | VHS-Commercial (VHS-C) | Light Industrial (I1-A) | Light Industrial (I1-B) | Light Industrial (I1-C) | Marine Service (MS) |
|---|---|---|---|---|---|---|---|---|
| Riding stable, private (minimum of 20 acres) | C | C | N | N | N | N | C | N |
| Riding stable, commercial (minimum of 20 acres)[110] | C | N | N | N | N | N | N | N |
| **Riding stable, private with equine-assisted therapy (Minimum of 20 acres)** | **C** | **C** | **N** | **N** | **N** | **N** | **N** | **N** |
| Sales, open lot and outdoor | N | N | N | N | N | N | N | N |
| Sales, seasonal agricultural[111] | N | N | N | C | N | N | N | N |

Sec. 12-187. Types of accessory buildings

N. Performance standards for detached agricultural buildings and domesticated farm animal buildings shall include the following:
1. *Setbacks*. All domestic farm animal buildings, feedlots and manure storage areas shall be setback as follows:
Natural or Manmade Feature Minimum Horizontal Setback
a. Any property line: 100 feet
b. Any existing well or residential structure on the same parcel: 50 feet
c. Any existing well or residential structure on adjacent or nearby parcels: 200 feet
d. Any body of seasonal or year-round surface water, stream, or drainageway 200 feet
2. *Slopes.* Such building, feedlot or manure storage area shall not be placed on slopes that exceed 13 percent.
3. *Marsh or wetland.* No marsh or wetland (as established by the predominant wetland vegetation and/or soils) shall be utilized for placement of the proposed structure, feedlot or grazing area.

O. The size of a lean-to shall not exceed 40% of the size of the enclosed portion of the building to which it is attached.

**P. Performance Standards for private riding stables with equine-assisted therapy shall include the following:**

**1. The riding stable shall be owned and operated by a professional therapist who resides at the property and who has licensure by a Minnesota professional licensing board and training as required to practice the appropriate therapy subspecialty.**

**ADOPTED BY THE CITY COUNCIL OF THE CITY OF AFTON THIS 20TH DAY OF AUGUST, 2019.**

**SIGNED:**

_____

Bill Palmquist, Mayor

**ATTEST:**

_____

Ronald J. Moorse, City Administrator

Motion by:
Second by:
Perkins:
Wroblewski:
Ross:
Nelson:
Palmquist:

**RESOLUTION 2019-32**

CITY OF AFTON
WASHINGTON COUNTY, MINNESOTA

**A RESOLUTION APPROVING THE APPLICATION BY KATHY AND DAVID BOISJOLI FOR A CONDITIONAL USE PERMIT FOR A PRIVATE RIDING STABLE WITH EQUINE-ASSISTED THERAPY AT 15489 45TH STREET**

**WHEREAS,** the City of Afton is a municipal corporation organized and existing under the laws of the State of Minnesota; and

**WHEREAS,** the City Council of the City of Afton has adopted zoning, subdivision, and building regulations as part of the Afton Code of Ordinances, to promote the orderly, economic, and safe development and utilization of land within the City; and

**WHEREAS,** Kathy and David Boisjoli have applied for a conditional use permit for a private riding stable with equine-assisted therapy at 15489 45th Street; and

**WHEREAS,** City staff reviewed the requests and drafted a report for consideration; and

**WHEREAS,** the Planning Commission held a public hearing on the application at its regular meeting of August 5, 2019 and recommended APPROVAL of the Conditional Use Permit on a vote of 5-1-0; and

**WHEREAS,** the legal description of the property is attached as Exhibit A, and

**WHEREAS,** the City Council heard the request at its regular meeting on August 20, 2019, at which it considered all of the comments, concerns and recommendations of the Planning Commission, Zoning Administrator and the applicant;

**NOW, THEREFORE, BE IT RESOLVED** that the City Council of the City of Afton does hereby APPROVE the Kathy and David Boisjoli application for a conditional use permit for a private riding stable with equine-assisted therapy at 15489 45th Street, based on the findings listed below and with the conditions listed below.

Findings

1. The subject property is zoned Rural Residential. The surrounding properties are zoned Rural Residential
2. The property is 20 acres in size, which is the minimum size required for a riding stable.
3. The riding stable is owned and operated by a licensed professional clinical counselor who resides at the property and is licensed by the Minnesota Board of Behavioral Health and Therapy and has the training required to practice equine-assisted psychotherapy.
4. The impacts of the activities related to the equine-assisted mental health therapy are similar to the impacts of other activities allowed at a riding stable, such as riding of horses, training of horses and riders and boarding of horses
5. The property has an existing riding stable with boarding stalls.

6. The riding stable has its own septic system and sanitation facilities. However, the septic system is noncompliant.
7. No new structures or expansion of existing structures are proposed.

Conditions

1. Hours of operation shall not exceed Monday 9-5, Tuesday 9-5, Wednesday 9-6, Thursday 9-7 and Friday 9-5.
2. The riding stable and required pastureland shall continue to be owned and operated by a health professional who resides at the property and who has licensure by a professional licensing board of the State of Minnesota and training as required to practice the appropriate therapy subspecialty.
3. All horses boarded at the private riding stable must be owned by the owner of the property and/or used to provide equine-assisted therapy.
4. If the sanitary facilities in the stable are to be used, either a new septic system needs to be provided or, if the septic system serving the house is adequately sized, a connection needs to be made to the septic system serving the house.
5. An Amended Conditional Use Permit shall be required for any future expansions or alterations.
6. Design, location, and specifications of any signs shall conform to the Afton Sign Ordinance. All signs shall require a permit to be issued by the Zoning Administrator.
7. The number of horses allowed to be boarded is based on the number of acres of natural pasture land.
8. Any lighting shall conform to Afton's ordinances
9. Non-compliance with the conditions of this permit shall be considered a violation and will result in revocation of this permit.

**ADOPTED BY THE CITY COUNCIL OF THE CITY OF AFTON THIS 20TH DAY OF AUGUST, 2019.**

**SIGNED:**

_____

Bill Palmquist, Mayor

**ATTEST:**

_____

Ronald J. Moorse, City Administrator

Motion by:
Second by:
Nelson:
Ross:
Wroblewski:
Perkins:
Palmquist:

**RESOLUTION 2019-32**

CITY OF AFTON
WASHINGTON COUNTY, MINNESOTA

**A RESOLUTION DENYING THE APPLICATION BY KATHY AND DAVID BOISJOLI FOR A CONDITIONAL USE PERMIT FOR A PRIVATE RIDING STABLE WITH EQUINE-ASSISTED THERAPY AT 15489 45TH STREET**

**WHEREAS,** the City of Afton is a municipal corporation organized and existing under the laws of the State of Minnesota; and

**WHEREAS,** the City Council of the City of Afton has adopted zoning, subdivision, and building regulations as part of the Afton Code of Ordinances, to promote the orderly, economic, and safe development and utilization of land within the City; and

**WHEREAS,** Kathy and David Boisjoli have applied for a conditional use permit for a private riding stable with equine-assisted therapy at 15489 45th Street; and

**WHEREAS,** City staff reviewed the requests and drafted a report for consideration; and

**WHEREAS,** the Planning Commission held a public hearing on the application at its regular meeting of August 5, 2019 and recommended APPROVAL of the Conditional Use Permit on a vote of 5-1-0; and

**WHEREAS,** the legal description of the property is attached as Exhibit A, and

**WHEREAS,** the City Council heard the request at its regular meeting on August 20, 2019, at which it considered all of the comments, concerns and recommendations of the Planning Commission, Zoning Administrator and the applicant;

**NOW, THEREFORE, BE IT RESOLVED** that the City Council of the City of Afton does hereby DENY the Kathy and David Boisjoli application for a conditional use permit for a private riding stable with equine-assisted therapy at 15489 45th Street, based on the findings listed below and with the conditions listed below.

Findings

1. The subject property is zoned Rural Residential. The surrounding properties are zoned Rural Residential
2. The property is 20 acres in size, which is the minimum size required for a riding stable.
3. The riding stable is owned and operated by a licensed professional clinical counselor who resides at the property and is licensed by the Minnesota Board of Behavioral Health and Therapy and has the training required to practice equine-assisted psychotherapy.
4. The proposal includes three other therapists providing equine-assisted therapy at the property, which would be a commercial use.
5. The traffic generated by four therapists would be greater than an average single-family home would generate.

**ADOPTED BY THE CITY COUNCIL OF THE CITY OF AFTON THIS 20TH DAY OF AUGUST, 2019.**

**SIGNED:**

_____

Bill Palmquist, Mayor

**ATTEST:**

_____

Ronald J. Moorse, City Administrator

Motion by:
Second by:
Nelson:
Ross:
Wroblewski:
Perkins:
Palmquist:

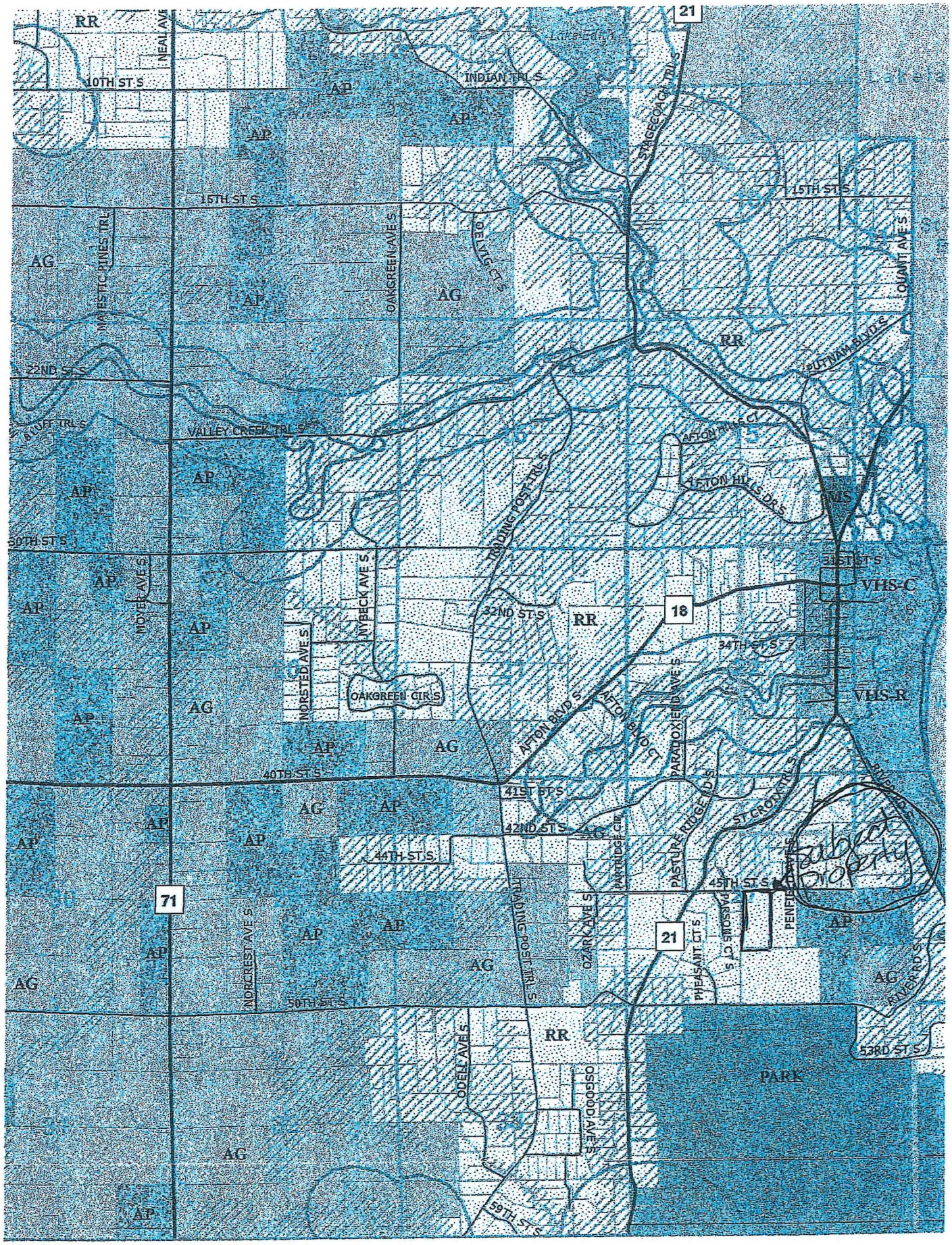

RR
NEAL AVE
10TH ST S
AP
INDIAN TRL S
21
STAGECOACH TRL S
15TH ST S
MAJESTIC PINES TRL
AG
OAKGREEN AVE S
DELVIG CT S
QUANT AVE S
PUTNAM BLVD S
22ND ST S
BLUFF TRL S
VALLEY CREEK TRL S
AFTON HILLS CT
AFTON HILLS DR S
TRADING POST TRL S
30TH ST S
MOYER AVE S
NYBECK AVE S
31ST ST S
VHS-C
32ND ST S
18
34TH ST S
NORSTED AVE S
OAKGREEN CIR S
AFTON BLVD S
AFTON BLVD CT
PARADOX END AVE S
VHS-R
40TH ST S
41ST ST S
42ND ST S
44TH ST S
PASTURE RIDGE RD S
ST CROIX TRL S
45TH ST S
71
NORCREST AVE S
OZARK AVE S
PARSONS CT S
PHEASANT CT S
50TH ST S
RIVER RD S
53RD ST S
ODELL AVE S
OSGOOD AVE S
PARK
59TH ST S

Date: August 2, 2019
To: Ron Moorse, City Administrator
From: Kathy Boisjoli, Owner
Subj: Healing Lives Counseling CUP

Healing Lives is a small counseling practice providing equine assisted psychotherapy to people struggling with depression, anxiety, and PTSD. Healing Lives offers equine assisted psychotherapy for adults, children, and families struggling with a myriad of mental health challenges ranging from depression, anxiety to post traumatic stress disorder. Equine Assisted Psychotherapy (EAP) is a powerful way to help people heal from trauma and enjoy healthier relationships and connect with others.

Healing Lives utilizes *Trauma-Focused Equine Assisted Psychotherapy (TF-EAP™)*, which is based on the neuroscience of human and horse brain development, the impact of trauma, and the role of relationships in healing. This is specifically an approach that heals mental health issues and is different from therapeutic riding for people with physical issues and special needs. Healing Lives focuses on mental health challenges.

Kathy and David Boisjoli purchased the home, outbuildings and 20 acres at 15489 45th St S in Afton, MN on April 8, 2019 to live in the home and operate the Healing Lives equine assisted psychotherapy business in the pole barn and surrounding pasture.

Healing Lives has 4 part time independent contractor therapists and myself for an equivalent of 2 FTEs providing equine assisted psychotherapy. The plan is to have 9 horses on the 20 acre property. Equine assisted psychotherapy will occur in several areas of the property. There is an outdoor round pen, an outdoor fenced in area which will be used as an outdoor arena, and several paddocks toward the back of the property.

The property has an existing pole building that has 4 stalls for horses. The pole building currently has a fully functioning indoor bathroom with a septic system for the pole barn. The pole barn will be used for equine assisted psychotherapy sessions when it is raining or there is inclement weather.

Hours of operation would be Monday 9-5, Tuesday 9-5, Wednesday 9-6, Thursday 9-7 and Friday 9-5. Sessions are an hour in length so at most traffic would be 3 cars on the hour during hours of operation. There is existing parking space in front of the pole building to accommodate 5 parking spots.

We are requesting a Commercial Use Permit to enable Healing Lives to provide equine assisted psychotherapy services to the community based upon the ordinance that allows a private riding stable to provided equine assisted mental health therapy. We believe this use of the 20 acres preserves Afton's rural focus and heritage in having up to 9 horses grazing the land and providing a peaceful, natural setting to help others heal from mental health challenges.

Sewer info



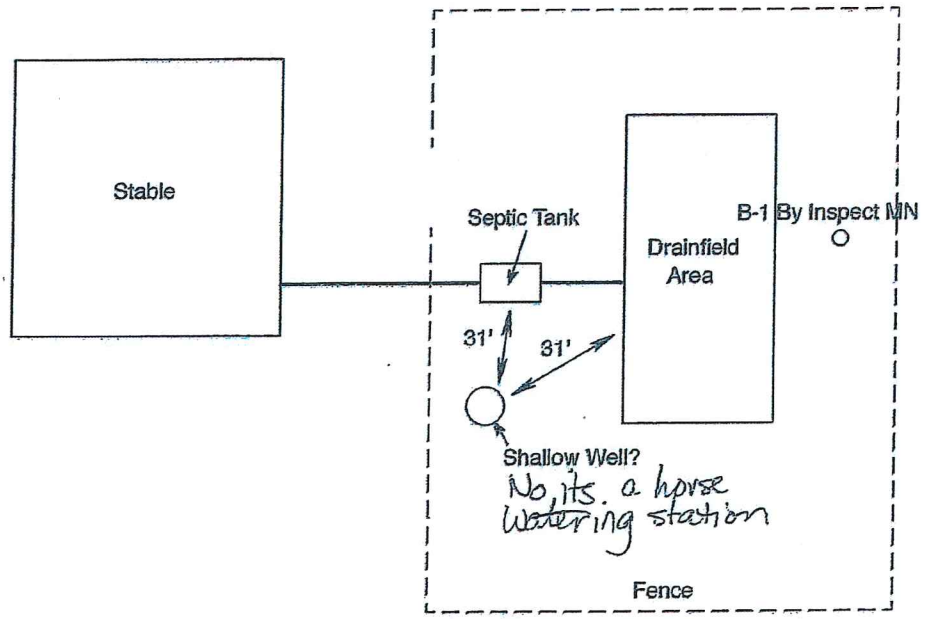


N

NO SCALE

15489 45th St S, Afton, MN 55001 - Stable

$17.00

© Copyright 2019, Washington County


**Washington County**

*PUBLIC WORKS DEPARTMENT*
*SURVEY DIVISION*

*11660 Myeron Road North*
*Stillwater, Minnesota 55082*
*(651) 430-4300*
*publicworks@co.washington.mn.us*
*www.co.washington.mn.us/surveyor*


**CONTOUR LEGEND**

- 10 FOOT INTERVAL CONTOUR
- 2 FOOT INTERVAL CONTOUR

Contours are provided courtesy of the Minnesota Department of Natural Resources (DNR). The Minnesota DNR makes no representation or warranties, express or implied, with respect to the reuse of data provided herewith, regardless of its format or the means of transmission. There is no guarantee or representation to the user as to the accuracy, currency, suitability, or reliability of this data for any purpose. The user accepts the data 'as is', and assumes all risks associated with its use. The Minnesota DNR assumes no responsibility for actual or consequential damage incurred as a result of any user's reliance on this data.

**LEGEND**

- DNR PROTECTED WATERS
- DNR PROTECTED WETLAND
- DNR PROTECTED WATERCOURSE
- MUNICIPAL BOUNDARY
- PARK BOUNDARY

NORTH

SCALE: 1 inch = 260 feet

SECTION-TOWNSHIP-RANGE INDEX

| | | |
|---|---|---|
| 2102820 | 2202820 | 2302820 |
| 2802820 | 2702820 | 2602820 |
| 3302820 | 3402820 | 3502820 |

COUNTY VICINITY MAP

* = LOCATION OF THIS MAP

SECTION VICINITY MAP

| | | | |
|---|---|---|---|
| 22 | 21 | 12 | 11 |
| NW | | NE | |
| 23 | 24 | 13 | 14 |
| 32 | 31 | *42 | 41 |
| SW | | SE | |
| 33 | 34 | 43 | 44 |

PROPERTY IDENTIFICATION NUMBER FORMAT (GEOCODE)

| SECTION NUMBER | TOWNSHIP NUMBER | RANGE NUMBER | QUARTER QUARTER | SPECIFIC PARCEL |
|---|---|---|---|---|
| ## | ### | ## | ## | #### |

(0001) = LAST FOUR DIGITS OF PROPERTY IDENTIFICATION NUMBER

*THIS DRAWING IS THE RESULT OF A COMPILATION AND REPRODUCTION OF LAND RECORDS AS THEY APPEAR IN VARIOUS WASHINGTON COUNTY OFFICES. WASHINGTON COUNTY IS NOT RESPONSIBLE FOR ANY INACCURACIES.*

*PROPERTY LINES AS SHOWN ARE FOR REFERENCE PURPOSES AND MAY NOT REPRESENT ACTUAL LOCATIONS.*

*MAP LAST UPDATED: May 13, 2019*

*NO ADDITIONAL CHANGES HAVE BEEN REPORTED TO DATE*

*DATE OF CONTOURS: November, 2011 DATE OF PHOTOGRAPHY: April, 2017*

Plotted May 23, 2019 at 11:52 a.m. by SURVPUB

# Memorandum

To: Honorable Mayor and City Council, City of Afton

From: Nick Guilliams, City Engineer

Date: August 20, 2019

Re: August Engineering Staff Report

---

## 1. River Road Sanitary Sewer

At the April 25, City Council Work Session, WSB was directed to prepare a proposal to prepare construction documents (plans and specifications), estimate of probable cost, bidding services, and construction observation for the replacement of approximately 2,200 of 4-inch diameter gravity sewer and approximately 600 linear feet of 2-inch forcemain along River Road.

On August 7, bids for the project were opened at City Hall. Three bidders submitted bids for Alternate 2 (final completion date of June 2020) and one bidder submitted a bid for Alternative 1 (final completion date of November 2019). The low bidder is A-1 Excavating with a bid for Alternate 2 of $547,715.00. This is approximately 30% over the engineers estimate of $403,235.00. A review of the contractors' bid prices shows a wide range of variability in the unit pricing. The current bidding environment is resulting in much higher than anticipated costs due to a heavy volume of construction activity in Minnesota. WSB recommends bidding the project in December or January when the bidding environment may be more favorable. In addition, WSB will review construction methods to determine if cost savings could be realized if alternative methods are specified.

**Action:** Consider rejecting the bids for the River Road Sanitary Sewer Project and rebidding the project in December or January.

## 2. Bridge 82505 – Guardrail Replacement

As discussed at the Public Works Committee meeting on July 15, 2019 and August 2, 2019, WSB was directed to provide a proposal to replace the deficient guardrail on Bridge 82505 to current standards. Bridge 82505 is located on Valley Creek Trail, approximately 1 mile east of the intersection of Valley Creek Trail and Neal Avenue.

During the 2017 inspection, it was determined that the guardrail and the bridge railing are deficient due to the wooden posts being rotted. The recommendation based off the inspection is to replace all posts including a new bridge rail system as the current railing is substandard for all speeds.

The attached letter proposal outlines the engineering services required to prepare a final roadway plan with load rating and rehab plans.

178 E 9TH STREET | SUITE 200 | SAINT PAUL, MN | 55101 | 651.286.8450 | WSBENG.COM

**Action:** Consider approval of proposal from WSB to provide engineering services required to prepare plans and quote package to replace the deficient guardrail for a not to exceed cost of $21,000

3. **2020 Road Improvement Project**

As discussed at the Public Works Committee meeting on July 15, 2019 and August 2, 2019, WSB was directed to provide a proposal to prepare plans and specifications to rehabilitate the following roads:

| ROAD | FROM | TO | MILES |
|---|---|---|---|
| 30th Street | 300' West of Nybeck | Neal Avenue | 0.86 |
| 42nd Street | Pasture Ridge Road | Cul-de-Sac | 0.23 |
| 8th Court | 8th Street | Cul-de-Sac | 0.18 |
| 8th Street | Manning Avenue | 8th Courth | 0.37 |
| 8th Street | 8th Court | 10th Street | 0.21 |
| 11th Street | Stagecoach Trail | East End | 0.12 |
| Division Street | Stagecoach Trail | Croixview Avenue | 0.63 |
| Oakgreen Avenue | 15th Street | South Cul-de-Sac | 0.76 |
| Paradox Avenue | 42nd Street | Cul-de-Sac | 0.27 |
| Pasture Ridge Road | 42nd Street | North Cul-de-Sac | 0.25 |
| | | **TOTAL** | **3.86** |

As part of this project, the replacement of the box culvert on 30th Street will be included. Although funding is not available to construct all the roads listed above in 2020, plans will be complete for construction in future years. Borings were completed on all roads earlier this year with a recommendation to perform a full depth reclamation on all roads.

Other than the 30th Street box culvert, this scope does not include the replacement of culverts on other roads. Similar to the project completed in 2017, it is assumed that public works will handle the replacement of all culverts prior to construction.

The attached letter proposal outlines the engineering services required to prepare plans, specifications, and perform bidding services. If approved, bidding would occur in January or February 2020 with construction beginning in the Spring of 2020.

**Action:** Consider approval of proposal from WSB to provide engineering services required to prepare plans, specifications, and perform bidding services for the 2020 Road Improvement Project for a not to exceed cost of $64,211.00

4. **Bridge L8173 (Putnam Blvd over Valley Creek)**

At the Public Works Committee meetings on July 15, 2019 and August 2, 2019 WSB was directed to look at options to open this bridge for use as a pedestrian trail. The bridge has been closed for a number of years, and is currently off-limits to vehicle and pedestrian traffic. The bridge is currently classified as structurally deficient.

In order to open the bridge up to pedestrian traffic, the bridge must meet current MnDOT requirements. This requires addressing all elements of the bridge including evaluating for scour and performing a structural load rating. The cost for engineering services to perform this work and corresponding construction costs is significant.

The City does have the option of removing the bridge from the MnDOT inspection program and could install some fencing and bollards to open it for pedestrian use. However, the City would assume all liability and risk by allowing the bridge to be utilized for pedestrian use without addressing structurally deficient items and not meeting trail design standards.

If removed from the program, it would no longer be eligible for future grant funding and would not be part of a regular inspection process. Deficient items identified in the most recent inspection report would eventually need to be addressed for continued use as a pedestrian bridge.

If you have any questions, please contact me at 612-419-3589 or nguilliams@wsbeng.com

8/7/2019

# WSB
## Project Bid Abstract

**Project Name:** River Road Sanitary Sewer Improvements
**Client:** City of Afton
**Bid Opening:** 08/07/2019 10:00 AM
**Project No.:** R-014030-000
**Owner:** City of Afton

Denotes corrected figure

| | Project: R-014030-000 - River Road Sanitary Sewer Improvements | | | | Engineers Estimate | | A-1 Excavating, Inc. | | Pember Companies, Inc. | | Northdale Construction Co., Inc. | |
|---|---|---|---|---|---|---|---|---|---|---|---|---|
| Line No. | Item | | Units | Quantity | Unit Price | Total Price | Unit Price | Total Price | Unit Price | Total Price | Unit Price | Total Price |
| Alternate 1 - Final Completion 11/27/19 | | | | | | | | | | | | |
| 1 | 2021.501 | MOBILIZATION | LS | 1 | $21,900.00 | $21,900.00 | $0.00 | $0.00 | $0.00 | $0.00 | $47,667.18 | $47,667.18 |
| 2 | 2101.502 | CLEARING | TREE | 2 | $1,000.00 | $2,000.00 | $0.00 | $0.00 | $0.00 | $0.00 | $843.72 | $1,687.44 |
| 3 | 2101.524 | GRUBBING | TREE | 2 | $500.00 | $1,000.00 | $0.00 | $0.00 | $0.00 | $0.00 | $843.72 | $1,687.44 |
| 4 | 2104.502 | REMOVE SANITARY CLEANOUT | EACH | 3 | $350.00 | $1,050.00 | $0.00 | $0.00 | $0.00 | $0.00 | $4,250.00 | $12,750.00 |
| 5 | 2104.503 | SAWING BIT PAVEMENT (FULL DEPTH) | L F | 520 | $3.00 | $1,560.00 | $0.00 | $0.00 | $0.00 | $0.00 | $4.50 | $2,340.00 |
| 6 | 2104.503 | REMOVE SEWER PIPE (SANITARY) | L F | 830 | $5.00 | $4,150.00 | $0.00 | $0.00 | $0.00 | $0.00 | $7.50 | $6,225.00 |
| 7 | 2104.503 | REMOVE RETAINING WALL | L F | 40 | $40.00 | $1,600.00 | $0.00 | $0.00 | $0.00 | $0.00 | $55.00 | $2,200.00 |
| 8 | 2104.504 | REMOVE BITUMINOUS PAVEMENT | S Y | 1700 | $5.00 | $8,500.00 | $0.00 | $0.00 | $0.00 | $0.00 | $6.45 | $10,965.00 |
| 9 | 2104.601 | SALVAGE AND REINSTALL LANDSCAPE STRUCTURES | LS | 1 | $5,000.00 | $5,000.00 | $0.00 | $0.00 | $0.00 | $0.00 | $6,500.00 | $6,500.00 |
| 10 | 2106.507 | EXCAVATION - COMMON | C Y | 240 | $25.00 | $6,000.00 | $0.00 | $0.00 | $0.00 | $0.00 | $57.50 | $13,800.00 |
| 11 | 2112.519 | SUBGRADE PREPARATION | RDST | 6 | $350.00 | $2,100.00 | $0.00 | $0.00 | $0.00 | $0.00 | $750.00 | $4,500.00 |
| 12 | 2123.610 | STREET SWEEPER (WITH PICKUP BROOM) | HOUR | 10 | $150.00 | $1,500.00 | $0.00 | $0.00 | $0.00 | $0.00 | $235.00 | $2,350.00 |
| 13 | 2211.507 | AGGREGATE BASE (CV) CLASS 5 | C Y | 460 | $25.00 | $11,500.00 | $0.00 | $0.00 | $0.00 | $0.00 | $85.00 | $39,100.00 |
| 14 | 2231.604 | BITUMINOUS PATCH SPECIAL | S Y | 590 | $40.00 | $23,600.00 | $0.00 | $0.00 | $0.00 | $0.00 | $76.13 | $44,916.70 |
| 15 | 2357.506 | BITUMINOUS MATERIAL FOR TACK COAT | GAL | 60 | $3.00 | $180.00 | $0.00 | $0.00 | $0.00 | $0.00 | $5.63 | $337.80 |
| 16 | 2360.501 | TYPE SP 12.5 WEARING COURSE MIX (2,C) | TON | 240 | $75.00 | $18,000.00 | $0.00 | $0.00 | $0.00 | $0.00 | $135.00 | $32,400.00 |
| 17 | 2411.618 | MODULAR BLOCK RETAINING WALL | S F | 150 | $50.00 | $7,500.00 | $0.00 | $0.00 | $0.00 | $0.00 | $73.13 | $10,969.50 |
| 18 | 2502.602 | 6" PVC PIPE DRAIN CLEANOUT | EACH | 1 | $250.00 | $250.00 | $0.00 | $0.00 | $0.00 | $0.00 | $1,527.15 | $1,527.15 |
| 19 | 2503.601 | SANITARY SEWER BYPASS PUMPING | L S | 1 | $10,000.00 | $10,000.00 | $0.00 | $0.00 | $0.00 | $0.00 | $6,500.00 | $6,500.00 |
| 20 | 2503.602 | CONNECT TO EXISTING SANITARY SEWER | EACH | 1 | $1,500.00 | $1,500.00 | $0.00 | $0.00 | $0.00 | $0.00 | $3,309.45 | $3,309.45 |
| 21 | 2503.602 | CONNECT TO EXISTING MANHOLES (SAN) | EACH | 11 | $2,000.00 | $22,000.00 | $0.00 | $0.00 | $0.00 | $0.00 | $3,469.44 | $38,163.84 |
| 22 | 2503.602 | CONNECT TO EXISTING SANITARY SEWER SER | EACH | 10 | $700.00 | $7,000.00 | $0.00 | $0.00 | $0.00 | $0.00 | $3,260.24 | $32,602.40 |
| 23 | 2503.602 | CONNECT TO EXISTING FORCE MAIN | EACH | 1 | $1,500.00 | $1,500.00 | $0.00 | $0.00 | $0.00 | $0.00 | $3,384.25 | $3,384.25 |
| 24 | 2503.602 | 6"X4" PVC WYE | EACH | 12 | $250.00 | $3,000.00 | $0.00 | $0.00 | $0.00 | $0.00 | $277.12 | $3,325.44 |

| | Project: R-014030-000 - River Road Sanitary Sewer Improvements | | | Engineers Estimate | | A-1 Excavating, Inc. | | Pember Companies, Inc. | | Northdale Construction Co., Inc. | |
|---|---|---|---|---|---|---|---|---|---|---|---|
| Line No. | Item | Units | Quantity | Unit Price | Total Price | Unit Price | Total Price | Unit Price | Total Price | Unit Price | Total Price |
| 25 | 2503.603 2" PVC FORCE MAIN | L F | 610 | $55.00 | $33,550.00 | $0.00 | $0.00 | $0.00 | $0.00 | $47.57 | $29,017.70 |
| 26 | 2503.603 4" PVC SANITARY SERVICE PIPE SDR 26 | L F | 90 | $30.00 | $2,700.00 | $0.00 | $0.00 | $0.00 | $0.00 | $67.30 | $6,057.00 |
| 27 | 2503.603 6" PVC PIPE SEWER (PIPE BURSTING) | L F | 2100 | $65.00 | $136,500.00 | $0.00 | $0.00 | $0.00 | $0.00 | $74.33 | $156,093.00 |
| 28 | 2503.603 6" PVC PIPE SEWER SDR 35 | L F | 340 | $50.00 | $17,000.00 | $0.00 | $0.00 | $0.00 | $0.00 | $91.96 | $31,266.40 |
| 29 | 2503.603 TELEVISE SANITARY SEWER | L F | 2420 | $1.00 | $2,420.00 | $0.00 | $0.00 | $0.00 | $0.00 | $4.22 | $10,212.40 |
| 30 | 2506.602 CHIMNEY SEALS | EACH | 2 | $250.00 | $500.00 | $0.00 | $0.00 | $0.00 | $0.00 | $327.99 | $655.98 |
| 31 | 2506.602 RECONSTRUCT MANHOLE INVERT (SANITARY) | EACH | 5 | $1,000.00 | $5,000.00 | $0.00 | $0.00 | $0.00 | $0.00 | $785.71 | $3,928.55 |
| 32 | 2506.602 CONSTRUCT 48" DIA SAN MANHOLE | EACH | 2 | $3,000.00 | $6,000.00 | $0.00 | $0.00 | $0.00 | $0.00 | $7,586.03 | $15,172.06 |
| 33 | 2535.503 BITUMINOUS CURB (MODIFIED) | L F | 1940 | $5.00 | $9,700.00 | $0.00 | $0.00 | $0.00 | $0.00 | $16.88 | $32,747.20 |
| 34 | 2540.602 TEMPORARY MAIL BOX | EACH | 12 | $50.00 | $600.00 | $0.00 | $0.00 | $0.00 | $0.00 | $575.00 | $6,900.00 |
| 35 | 2563.601 TRAFFIC CONTROL | LS | 1 | $2,500.00 | $2,500.00 | $0.00 | $0.00 | $0.00 | $0.00 | $5,912.50 | $5,912.50 |
| 36 | 2571.525 DECIDUOUS SHRUB NO 5 CONT | SHRB | 8 | $100.00 | $800.00 | $0.00 | $0.00 | $0.00 | $0.00 | $140.63 | $1,125.04 |
| 37 | 2573.503 SEDIMENT CONTROL LOG TYPE WOOD FIBER | L F | 1070 | $5.00 | $5,350.00 | $0.00 | $0.00 | $0.00 | $0.00 | $5.06 | $5,414.20 |
| 38 | 2574.507 COMMON TOPSOIL BORROW | C Y | 70 | $35.00 | $2,450.00 | $0.00 | $0.00 | $0.00 | $0.00 | $55.88 | $3,911.60 |
| 39 | 2575.504 SODDING TYPE LAWN | S Y | 580 | $25.00 | $14,500.00 | $0.00 | $0.00 | $0.00 | $0.00 | $12.09 | $7,012.20 |
| 40 | 2575.508 HYDRAULIC MULCH MATRIX | LB | 300 | $4.00 | $1,200.00 | $0.00 | $0.00 | $0.00 | $0.00 | $7.31 | $2,193.00 |
| 41 | 2575.523 RAPID STABILIZATION METHOD 3 | MGAL | 0.3 | $250.00 | $75.00 | $0.00 | $0.00 | $0.00 | $0.00 | $8,437.50 | $2,531.25 |
| | Total Alternate 1 - Final Completion 11/27/19: | | | | $403,235.00 | | $0.00 | | $0.00 | | $649,358.67 |
| Alternate 2 - Final Completion 06/30/2020 | | | | | | | | | | | |
| 42 | 2021.501 MOBILIZATION | LS | 1 | $21,900.00 | $21,900.00 | $57,502.00 | $57,502.00 | $21,200.00 | $21,200.00 | $38,281.12 | $38,281.12 |
| 43 | 2101.502 CLEARING | TREE | 2 | $1,000.00 | $2,000.00 | $650.00 | $1,300.00 | $1,500.00 | $3,000.00 | $843.75 | $1,687.50 |
| 44 | 2101.524 GRUBBING | TREE | 2 | $500.00 | $1,000.00 | $650.00 | $1,300.00 | $500.00 | $1,000.00 | $843.75 | $1,687.50 |
| 45 | 2104.502 REMOVE SANITARY CLEANOUT | EACH | 3 | $350.00 | $1,050.00 | $500.00 | $1,500.00 | $1,350.00 | $4,050.00 | $4,250.00 | $12,750.00 |
| 46 | 2104.503 SAWING BIT PAVEMENT (FULL DEPTH) | L F | 520 | $3.00 | $1,560.00 | $4.00 | $2,080.00 | $3.50 | $1,820.00 | $4.50 | $2,340.00 |
| 47 | 2104.503 REMOVE SEWER PIPE (SANITARY) | L F | 830 | $5.00 | $4,150.00 | $0.10 | $83.00 | $16.00 | $13,280.00 | $7.50 | $6,225.00 |
| 48 | 2104.503 REMOVE RETAINING WALL | L F | 40 | $40.00 | $1,600.00 | $25.00 | $1,000.00 | $28.50 | $1,140.00 | $55.00 | $2,200.00 |
| 49 | 2104.504 REMOVE BITUMINOUS PAVEMENT | S Y | 1700 | $5.00 | $8,500.00 | $5.00 | $8,500.00 | $5.75 | $9,775.00 | $6.45 | $10,965.00 |
| 50 | 2104.601 SALVAGE AND REINSTALL LANDSCAPE STRUCTURES | LS | 1 | $5,000.00 | $5,000.00 | $1,000.00 | $1,000.00 | $1,000.00 | $1,000.00 | $6,500.00 | $6,500.00 |
| 51 | 2106.507 EXCAVATION - COMMON | C Y | 240 | $25.00 | $6,000.00 | $25.00 | $6,000.00 | $50.00 | $12,000.00 | $57.50 | $13,800.00 |
| 52 | 2112.519 SUBGRADE PREPARATION | RDST | 6 | $350.00 | $2,100.00 | $400.00 | $2,400.00 | $350.00 | $2,100.00 | $750.00 | $4,500.00 |
| 53 | 2123.610 STREET SWEEPER (WITH PICKUP BROOM) | HOUR | 10 | $150.00 | $1,500.00 | $165.00 | $1,650.00 | $140.00 | $1,400.00 | $235.00 | $2,350.00 |
| 54 | 2211.507 AGGREGATE BASE (CV) CLASS 5 | C Y | 460 | $25.00 | $11,500.00 | $45.00 | $20,700.00 | $60.00 | $27,600.00 | $85.00 | $39,100.00 |
| 55 | 2231.604 BITUMINOUS PATCH SPECIAL | S Y | 590 | $40.00 | $23,600.00 | $63.00 | $37,170.00 | $85.00 | $50,150.00 | $76.13 | $44,916.70 |
| 56 | 2357.506 BITUMINOUS MATERIAL FOR TACK COAT | GAL | 60 | $3.00 | $180.00 | $2.00 | $120.00 | $1.85 | $111.00 | $5.63 | $337.80 |
| 57 | 2360.501 TYPE SP 12.5 WEARING COURSE MIX (2,C) | TON | 240 | $75.00 | $18,000.00 | $115.00 | $27,600.00 | $113.00 | $27,120.00 | $135.00 | $32,400.00 |

| | Project: R-014030-000 - River Road Sanitary Sewer Improvements | | | | Engineers Estimate | | A-1 Excavating, Inc. | | Pember Companies, Inc. | | Northdale Construction Co., Inc. | |
|---|---|---|---|---|---|---|---|---|---|---|---|---|
| Line No. | Item | | Units | Quantity | Unit Price | Total Price | Unit Price | Total Price | Unit Price | Total Price | Unit Price | Total Price |
| 58 | 2411.618 | MODULAR BLOCK RETAINING WALL | S F | 150 | $50.00 | $7,500.00 | $60.00 | $9,000.00 | $64.00 | $9,600.00 | $73.13 | $10,969.50 |
| 59 | 2502.602 | 6" PVC PIPE DRAIN CLEANOUT | EACH | 1 | $250.00 | $250.00 | $900.00 | $900.00 | $1,650.00 | $1,650.00 | $1,527.15 | $1,527.15 |
| 60 | 2503.601 | SANITARY SEWER BYPASS PUMPING | L S | 1 | $10,000.00 | $10,000.00 | $5,000.00 | $5,000.00 | $6,700.00 | $6,700.00 | $6,500.00 | $6,500.00 |
| 61 | 2503.602 | CONNECT TO EXISTING SANITARY SEWER | EACH | 1 | $1,500.00 | $1,500.00 | $2,600.00 | $2,600.00 | $3,350.00 | $3,350.00 | $3,309.45 | $3,309.45 |
| 62 | 2503.602 | CONNECT TO EXISTING MANHOLES (SAN) | EACH | 11 | $2,000.00 | $22,000.00 | $2,700.00 | $29,700.00 | $4,000.00 | $44,000.00 | $3,469.44 | $38,163.84 |
| 63 | 2503.602 | CONNECT TO EXISTING SANITARY SEWER SER | EACH | 10 | $700.00 | $7,000.00 | $1,500.00 | $15,000.00 | $1,950.00 | $19,500.00 | $3,260.24 | $32,602.40 |
| 64 | 2503.602 | CONNECT TO EXISTING FORCE MAIN | EACH | 1 | $1,500.00 | $1,500.00 | $1,600.00 | $1,600.00 | $1,800.00 | $1,800.00 | $3,384.25 | $3,384.25 |
| 65 | 2503.602 | 6"X4" PVC WYE | EACH | 12 | $250.00 | $3,000.00 | $600.00 | $7,200.00 | $2,000.00 | $24,000.00 | $277.12 | $3,325.44 |
| 66 | 2503.603 | 2" PVC FORCE MAIN | L F | 610 | $55.00 | $33,550.00 | $46.00 | $28,060.00 | $43.00 | $26,230.00 | $47.57 | $29,017.70 |
| 67 | 2503.603 | 4" PVC SANITARY SERVICE PIPE SDR 26 | L F | 90 | $30.00 | $2,700.00 | $68.00 | $6,120.00 | $160.00 | $14,400.00 | $67.30 | $6,057.00 |
| 68 | 2503.603 | 6" PVC PIPE SEWER (PIPE BURSTING) | L F | 2100 | $65.00 | $136,500.00 | $89.00 | $186,900.00 | $115.00 | $241,500.00 | $74.33 | $156,093.00 |
| 69 | 2503.603 | 6" PVC PIPE SEWER SDR 35 | L F | 340 | $50.00 | $17,000.00 | $59.00 | $20,060.00 | $84.00 | $28,560.00 | $91.66 | $31,164.40 |
| 70 | 2503.603 | TELEVISE SANITARY SEWER | L F | 2420 | $1.00 | $2,420.00 | $2.00 | $4,840.00 | $1.50 | $3,630.00 | $4.22 | $10,212.40 |
| 71 | 2506.602 | CHIMNEY SEALS | EACH | 2 | $250.00 | $500.00 | $350.00 | $700.00 | $320.00 | $640.00 | $327.99 | $655.98 |
| 72 | 2506.602 | RECONSTRUCT MANHOLE INVERT (SANITARY) | EACH | 5 | $1,000.00 | $5,000.00 | $1,150.00 | $5,750.00 | $935.00 | $4,675.00 | $785.71 | $3,928.55 |
| 73 | 2506.602 | CONSTRUCT 48" DIA SAN MANHOLE | EACH | 2 | $3,000.00 | $6,000.00 | $4,450.00 | $8,900.00 | $4,300.00 | $8,600.00 | $7,586.03 | $15,172.06 |
| 74 | 2535.503 | BITUMINOUS CURB (MODIFIED) | L F | 1940 | $5.00 | $9,700.00 | $9.00 | $17,460.00 | $8.50 | $16,490.00 | $16.88 | $32,747.20 |
| 75 | 2540.602 | TEMPORARY MAIL BOX | EACH | 12 | $50.00 | $600.00 | $50.00 | $600.00 | $150.00 | $1,800.00 | $575.00 | $6,900.00 |
| 76 | 2563.601 | TRAFFIC CONTROL | LS | 1 | $2,500.00 | $2,500.00 | $10,000.00 | $10,000.00 | $8,700.00 | $8,700.00 | $5,912.50 | $5,912.50 |
| 77 | 2571.525 | DECIDUOUS SHRUB NO 5 CONT | SHRB | 8 | $100.00 | $800.00 | $110.00 | $880.00 | $150.00 | $1,200.00 | $140.63 | $1,125.04 |
| 78 | 2573.503 | SEDIMENT CONTROL LOG TYPE WOOD FIBER | L F | 1070 | $5.00 | $5,350.00 | $6.00 | $6,420.00 | $3.50 | $3,745.00 | $5.06 | $5,414.20 |
| 79 | 2574.507 | COMMON TOPSOIL BORROW | C Y | 70 | $35.00 | $2,450.00 | $28.00 | $1,960.00 | $60.00 | $4,200.00 | $55.88 | $3,911.60 |
| 80 | 2575.504 | SODDING TYPE LAWN | S Y | 580 | $25.00 | $14,500.00 | $12.00 | $6,960.00 | $12.00 | $6,960.00 | $12.09 | $7,012.20 |
| 81 | 2575.508 | HYDRAULIC MULCH MATRIX | LB | 300 | $4.00 | $1,200.00 | $2.00 | $600.00 | $3.50 | $1,050.00 | $7.31 | $2,193.00 |
| 82 | 2575.523 | RAPID STABILIZATION METHOD 3 | MGAL | 0.3 | $250.00 | $75.00 | $2,000.00 | $600.00 | $850.00 | $255.00 | $8,437.50 | $2,531.25 |
| | | Total Alternate 2 - Final Completion 06/30/2020: | | | | $403,235.00 | | $547,715.00 | | $659,981.00 | | $639,870.73 |
| | | | | | | | | | | | | |
| | Total Alternate 1 - Final Completion 11/27/19: | | | | | $403,235.00 | | $0.00 | | $0.00 | | $649,358.67 |
| | Total Alternate 2 - Final Completion 06/30/2020: | | | | | $403,235.00 | | $547,715.00 | | $659,981.00 | | $639,870.73 |

**I hereby certify that this is an exact reproduction of bids received.**

**Certified By:** Susan J. Polka **License No.** 21715

**Date:** August 7, 2019

August 20, 2019

Mr. Ron Moorse
City Administrator
City of Afton
3033 St Croix Trl S
Afton, MN 55001

Re: Proposal for Professional Engineering Services – Guardrail Improvements
City of Afton, MN
WSB Project No. 010981-000 BR 82505

Dear Mr. Moorse:

This proposal is being offered as a design service for guardrail replacement on Bridge 82505 located on Valley Creek Trail in the City of Afton. WSB appreciates the opportunity to present this proposal for professional engineering services relating to the guardrail improvements for the City of Afton. This letter proposal outlines the engineering services required to prepare a final roadway plan with load rating and rehab plans.

## BACKGROUND AND PROJECT UNDERSTANDING

The project, Bridge 82505, is located along Valley Creek Trail in the City of Afton and is approximately 0.90 miles east of the intersection of Valley Creek Trail and County Road 71 (Neal Ave S). It was built in 1979 and is a 3-barrel box culvert that is classified as a bridge and is built over Valley Creek. During the 2017 inspection, it was determined that the guardrail and the bridge railing are deficient due to the wooden posts being rotted. The recommendation based off the inspection is to replace all posts including a new bridge rail system as the current railing is substandard for all speeds. Valley Creek Trail is signed as a 45-mph roadway.

701 XENIA AVENUE S | SUITE 300 | MINNEAPOLIS, MN | 55416 | 763.541.4800 | WSBENG.COM

A concrete parapet has been proposed in place of the existing bridge rail system. The concrete parapet proposed is a MnDOT standard parapet that has been crash tested based on the roadway speed. Due to the additional loading of the concrete parapet, the bridge will need to be load rated to ensure that the bridge can withstand the loading of the railing. The addition of the parapet would also require a full set of rehab plans and be reviewed by MnDOT. The guardrail will mount to the parapet based off standard guardrail details.

A tube rail could be designed and mounted similar to the existing railing, however this poses numerous challenges. A variance/design exception would need to be obtained to utilize a non-tested rail as MnDOT does not have a standard tube rail that has been crash tested. The tube railing would also require a full set of rehab plans and would require more design work and details as there is no standard. Another design challenge includes how the guardrail would mount to the tube railing. The structural steel would also likely be more expensive as the fabrication and inspections for structural steel are more intensive.

After these considerations, the concrete parapet has been proposed.

## FINAL DESIGN AND CONSTRUCTION PLAN PREPARATION

### Scope of Services

The City of Afton has requested WSB to complete the final design for the guardrail replacement on Bridge 82505. The project will require coordination with multiple agencies including, but not limited to, the City, utility companies as well as MnDOT to review the bridge rehab plans. The plan will be developed in accordance with City Standards and guardrail will meet MnDOT Road Design Manual guidelines. WSB will prepare specifications and Engineer's Opinion of Probable Cost.

WSB's approach will include performing the necessary survey, determine the existing alignment and profile, identify the design standards for the concrete parapet and guardrail, develop the typical sections and cross sections, and identify the construction limits for the project. For this project, the existing alignment and profile will be utilized. Once these parameters are set, WSB will develop final construction plan documents including final roadway and bridge rehab plans, specifications and cost estimate.

### Project Assumptions

- No wetland impacts. If any wetland delineation/mitigation work is required for this project, this work will be considered an additional service.
- No permitting. If any permits are required for this project, this work will be considered an additional service. The City will pay any permitting fees.
- It is assumed the existing roadway grading for the guardrail is sufficient. Any major grading for the guardrail will require extra work and this will be considered an additional service due to the requirement to provide cross sections, earthwork calculations, etc.
- No alignment or profile modifications.
- No right of way acquisitions will be necessary.

**Guardrail Replacement Project**

**Task 1 – Project Management**

This task will consist of management and administration of the project team as well as project coordination and communication with the City of Afton on the project.

Utility Coordination: WSB will do a Gopher One Call to request private utility maps for the area. The private utility locations will be shown on the construction plans and reviewed for conflicts. WSB will also coordinate and meet with the affected private utility companies (1 meeting assumed). There is an existing conduit on the outside of the existing bridge rail that will be impacted by the replacement.

**Task 2 – Final Design and Plan Preparation**

WSB will prepare a set of detailed construction plans for the guardrail replacement including minor grading in accordance with MnDOT standards. We will coordinate our work closely with the City during the entire design process to ensure the City's expectations are satisfied. A final set of plans will be submitted to the City of their review and approval. Final construction plans will include the following:

- Title Sheet
- General Layout
- Estimated Quantities
- Earthwork Tabulation
- Miscellaneous Details
- Alignment Plans and Tabulations
- Existing utility and Removal Plans
- Construction Plan
- Turf Establishment Plan
- Cross-Sections
- Bridge Rehab Plans

WSB proposes to complete the 90% plans for City review and comment.

WSB will prepare an Opinion of Probable Construction Cost based on quantities generated as part of the preparation of the construction plans. Cost will be split by funding source.

**Task 3 – Structural Design**

A bridge load rating as well as a set of rehab plans to include the concrete parapet design will be completed in this task. A load rating will need to be performed in order to ensure the existing bridge can withstand the loading for the concrete parapet. The concrete parapet is necessary to meet current crash standards. The box culvert is too wide to have guardrail span it and the current railing will not withstand a crash and is a safety hazard.

**Task 4 – Survey**

A topographic survey will be completed in this task as needed to complete design.

**Task 5 – Specifications**

A complete Project Manual for bidding and quoting the work will be provided to the City. Special provisions will be written for unique items not covered adequately in the "MnDOT Standard Specification for Construction, 2018 Edition". Each provision will contain a description, materials, construction requirements, method of measurement and basis of payment for each item. Deletions from and additions to standard specifications will be written and included as necessary.

## ADDITIONAL SERVICES

**Construction Services**
WSB will provide the City with an additional proposal for Construction Services. WSB will provide services for this task on an hourly rate basis. Services provided by WSB for this task will be at the request of the City and may include design services for plan modifications, acting as the City's representative on the project site, conducting on-site observations for the work, interpreting the requirements of the contract documents, preparing and maintaining all requirement contract administration documentation, coordination of construction activities and shop drawing review.

## ESTIMATED COST OF SERVICES

The Estimate of Cost for the final design of plan preparation on the following page shows the estimated hours for each task by general employee classification. The fees are broken up into a roadway design estimate and a structural design estimate.

We will bill the City based on an hourly billing rate shown in the Estimate of Cost up to the estimate contract amount of $21,000 for the guardrail replacement design, concrete parapet design including bridge rehab final design plans, and construction plans preparation.

## SCHEDULE

WSB will begin work on the project as soon as authorized by the City.

| | |
|---|---|
| Survey | September 2019 |
| Bridge Load Rating | October 2019 |
| Roadway and Structural Final Design | November 2019 |
| Submit Final Plans to the City | December 2019 |
| Project out to Bid | Early Spring 2020 |
| Project Construction | Spring/Summer 2020 |

This letter represents our entire understanding of the project scope. If the City is in agreement, please sign on the space provided and return one original signed copy to us for our records. We will start immediately upon receipt of the signed agreement.

If you have any questions concerning the work plan or fee as discussed herein, please feel free to contact me at 651-286-8468. We look forward to working with you and greatly appreciate the opportunity to assist you and your staff in the successful delivery of this project.

Sincerely,

WSB

Nick Guilliams
City Engineer

**ACCEPTED BY:**
**City of Afton, MN**

Name _____

Title _____

Date _____

# Estimate of Cost

## Bridge 82505 Guardrail Replacement

City of Afton, Minnesota

5/13/2019

| PRELIMINARY DESIGN STUDY | | Estimated Hours | | | | | | |
|---|---|---|---|---|---|---|---|---|
| | | Senior Project Manager | Proj Engineer | Engineering Specialist VI | Survey Crew 2-Person | Office Tech IV | Hours | Cost |
| *Task No.* | *Description* | | | | | | | |
| 1 | PROJECT MANAGEMENT | 8 | | | | 4 | 12 | $1,600.00 |
| 2 | BASE MAPPING, DATA COLLECTION | | | 2 | 8 | | 10 | $1,806.00 |
| 3 | FINAL DESIGN AND PLAN PREPARATION | | | | | | | |
| | A. Statement of Quantities/Tabulations | | 1 | | | | 1 | $116.00 |
| | B. Earthwork Tabulation | | 2 | 2 | | | 4 | $518.00 |
| | C. Typical Section | | 2 | | | | 2 | $232.00 |
| | D. Miscellaneous Details/Standard Plans/Standard Plates | | 1 | | | | 1 | $116.00 |
| | E. Construction Staging/Traffic Control | | | 1 | | | 1 | $143.00 |
| | F. Alignment Plans and Tabulations | | | 1 | | | 1 | $143.00 |
| | G. Existing Utility and Removal Plans | | 2 | 1 | | | 3 | $375.00 |
| | H. Construction Plan and Profile | | 2 | 1 | | | 3 | $375.00 |
| | I. Turf Establishment/Erosion Control | | 2 | | | | 2 | $232.00 |
| | J. Cross-Sections | | 2 | 4 | | | 6 | $804.00 |
| 4 | PLAN REVIEW AND APPROVAL | 4 | 4 | 4 | | | 12 | $1,672.00 |
| 5 | SPECIFICATIONS | 4 | 8 | | | 10 | 22 | $2,384.00 |
| 6 | CONSTRUCTION COST ESTIMATE | | 4 | | | | 4 | $464.00 |
| **Total Hours** | | **16** | **30** | **16** | **8** | **14** | **84** | **$10,980.00** |
| *Hourly Costs* | | 159.00 | 116.00 | 143.00 | 190.00 | 82.00 | | |
| Labor Costs | | $2,544.00 | $3,480.00 | $2,288.00 | $1,520.00 | $1,148.00 | | $10,980.00 |
| **Total Labor and Expenses** | | | | | | | | **$10,980.00** |

**EXHIBIT C-2**

## WSB

## ESTIMATE OF COST - Design Services

**Final Engineering for Br 82505 - Railing Replacement**

**City of Afton (City)**

| | Phase 1<br>2019 Design<br>WORK TASK | Senior Structural Engineer | Structural Engr. | Senior Bridge Tech. | Admin | Total Hours | Cost | Notes |
|---|---|---|---|---|---|---|---|---|
| *Task #* | *Description* | | | | | | | |
| | | | | | | | | |
| 1 | Final Design | | | | | | | |
| | Final Plans | 4 | 12 | 21 | | 37 | $4,995.00 | (1, 2) |
| | Special Provisions | | 6 | | 4 | 10 | $1,024.00 | (1, 2) |
| | Quantities | | 2 | 1 | | 3 | $375.00 | (1, 2) |
| | Quality Control / Quality Assurance | 4 | 4 | 2 | | 10 | $1,350.00 | (1, 2) |
| | | | | | | | | |
| 2 | Load Rating | | | | | | | |
| | Mob + Site Visit | 3 | | | | 3 | $450.00 | (3) |
| | Load Rating | 7 | | | | 7 | $1,050.00 | (4) |
| | Quality Control / Quality Assurance | 2 | 4 | | | 6 | $764.00 | (5) |
| | | | | | | | | |
| | | | | | | | | |
| **Total Hours** | | 20 | 28 | 24 | 4 | 76 | $10,008.00 | |
| | | | | | | | | |
| *Hourly Costs* | | 150.00 | 116.00 | 143.00 | 82.00 | | | |
| **Subtotal Labor Costs** | | **$3,000.00** | **$3,248.00** | **$3,432.00** | **$328.00** | | **$10,008.00** | |
| *Phase 1 (Design) Total* | | | | | | Total | $10,008.00 | |

| NTE | $10,000.00 |
|---|---|

**NOTES:**

(1) Assume one (1) GPE sheet w/ removals, (1) typical section with removals, (1) railing sheet (MnDOT Standard Plans), and (1) misc details sheet.

(2) Assume survey hours included with roadway hours.

(3) Inspection required with load rating.

(4) Load rating using MnDOT approved BrR software.

August 20, 2019

Honorable Mayor and City Council
City of Afton
3033 St Croix Trail S
Afton, Minnesota 55001

Re: Professional Services Proposal
2020 Road Improvement Project
City of Afton, MN
WSB Project 14501-000

Dear Honorable Mayor and Council Members:

As requested, we are providing you a proposal for the preparation of plans, specifications and bidding services for the 2020 Road Improvement Project in the City of Afton. The proposed improvements include:

## FULL DEPTH RECLAMATION

| ROAD | FROM | TO | MILES |
|---|---|---|---|
| 30th Street | 300' West of Nybeck | Neal Avenue | 0.86 |
| 42nd Street | Pasture Ridge Road | Cul-de-Sac | 0.23 |
| 8th Court | 8th Street | Cul-de-Sac | 0.18 |
| 8th Street | Manning Avenue | 8th Courth | 0.37 |
| 8th Street | 8th Court | 10th Street | 0.21 |
| 11th Street | Stagecoach Trail | East End | 0.12 |
| Division Street | Stagecoach Trail | Croixview Avenue | 0.63 |
| Oakgreen Avenue | 15th Street | South Cul-de-Sac | 0.76 |
| Paradox Avenue | 42nd Street | Cul-de-Sac | 0.27 |
| Pasture Ridge Road | 42nd Street | North Cul-de-Sac | 0.25 |
| | | **TOTAL** | **3.86** |

## PROPOSED SERVICES

*Preparation of Plans and Specifications & Bidding Services:*

- Project management and coordination/meetings with City staff and the City Council.
- Coordinate private utilities located in the improvement corridor. This coordination will include providing drawings to any affected utility companies and hosting an on-site utility relocation meeting to determine what utilities, if any, will require relocation.

178 E 9TH STREET | SUITE 200 | SAINT PAUL, MN | 55101 | 651.286.8450 | WSBENG.COM

- Complete a topographic survey to identify surficial information/landmarks, existing grades, to be used for construction centerline staking and to address drainage issues as much as possible.
- Prepare final project and construction schedule.
- Obtain all permits required to construct the project.
- Preparation of estimated quantities and detailed engineer's opinion of probable construction cost as it relates to the work outlined in our scope of services.
- Prepare final plans, project specific specifications, contract documents, and bidding forms. Specifications will be in accordance with MnDOT standard specifications.
- Coordinate project advertisement. We will distribute plans and specifications to the contractors, as well as any needed addenda. We will also attend the bid opening at City Hall, prepare a tabulation of bids, and bid results letter for City Council consideration of award.

**PROPOSED FEE**

We are proposing to complete the work on a cost-reimbursable basis in accordance with our current fee schedule for a not to exceed cost of **$64,211**. Due to the uncertainty on which roads can be completed, WSB will provide a separate proposal for construction services.

Thank you for this opportunity to provide professional consulting services to the City of Afton. If this proposal is acceptable, please execute the signature block below and return as our authorization to proceed.

Please do not hesitate to contact me at 651-286-8468 if you have any questions.

Sincerely,

***WSB***

Nick Guilliams, P.E.
City Engineer

**PROPOSAL FOR:**

**Preparation of Bid Documents and Bidding Services**
*– 2020 Road Improvement Project*

**ACCEPTED BY:**

**City of Afton, MN**

Name _____

Title _____

Date _____

wsb

# Estimate of Project Fees
# 2020 Road Improvement Project
# City of Afton, MN

| Phase | Description | ESTIMATED HOURS: Senior Project Manager | Engineering Specialist VI | 2-Person Survey Crew | Graduate Engineer | Water Resources Project Manager | Water Resources Project Engineer | Environmental | Office Technician | Total Hours | Amount |
|---|---|---|---|---|---|---|---|---|---|---|---|
| | | NG | TC | | LE | JN | MR | DS | KP | | |
| 1. | Final Design | | | | | | | | | | |
| A. | Plans | | | | | | | | | | |
| | *A. Title Sheet* | | 2 | | | | | | | 2 | $ 286.00 |
| | *B. General Layout* | | 2 | | 1 | | | | | 3 | $ 402.00 |
| | *C. Statement of Quantities/Tabulations* | 1 | 1 | | 2 | | | | | 4 | $ 541.00 |
| | *D. Typical Section/Pavement Details* | 2 | 4 | | 2 | | | | | 8 | $ 1,136.00 |
| | *E. Miscellaneous Details* | 1 | 2 | | 2 | | | | | 5 | $ 684.00 |
| | *F. Construction Plan and Profile* | 16 | 40 | | 60 | 5 | 20 | | | 141 | $ 18,311.00 |
| | *G. Drainage Plan , Details & Quantities* | 4 | 12 | | 8 | 6 | 12 | | | 42 | $ 5,570.00 |
| | *H. Cross-Sections* | 4 | 12 | | 6 | | | | | 22 | $ 3,076.00 |
| B. | *Specifications* | 12 | | | 28 | | | | 4 | 44 | $ 5,608.00 |
| C. | *Private Utility Coordination* | 2 | | | 6 | | | | | 8 | $ 1,028.00 |
| D. | *Plan Review/Approval* | 2 | | | 4 | | | | | 6 | $ 796.00 |
| E. | Bidding Administration | 2 | | | 12 | | | | 2 | 16 | $ 1,908.00 |
| F. | Permits | 1 | | | 6 | 8 | 12 | 20 | 2 | 49 | $ 5,266.00 |
| G. | Cost Estimate | 4 | | | 8 | | | | | 12 | $ 1,592.00 |
| H. | Survey | | | 85 | | | | | | 85 | $ 16,150.00 |
| I. | Property Right-Of-Entry | 2 | | | 2 | | 5 | | | 9 | $ 1,109.00 |
| J. | Project Meetings | 2 | | | 2 | | | | 2 | 6 | $ 748.00 |
| | | 55 | 75 | 85 | 149 | 19 | 49 | 20 | 10 | 462 | $ 64,211.00 |
| Gand Total Hours | | 55 | 75 | 85 | 149 | 19 | 49 | 20 | 10 | 462 | |
| *Hourly Rate* | | 166.00 | 143.00 | 190.00 | 116.00 | 159.00 | 109.00 | 82.00 | 92.00 | | |
| Total Direct Labor Amount | | $ 9,130.00 | $ 10,725.00 | $ 16,150.00 | $ 17,284.00 | $ 3,021.00 | $ 5,341.00 | $ 1,640.00 | $ 920.00 | | $ 64,211.00 |

| TOTAL PROJECT FEE AMOUNT | $ 64,211.00 |
|---|---|

City of Afton
3033 St. Croix Trl, P.O. Box 219
Afton, MN 55001

# Meeting Date August 20, 2019

# Council Action Memo

To: Mayor Palmquist and City Council Members

From: Ron Moorse, City Administrator

Date: August 15, 2019

Re: 2018 Audit Report

---

Carlson SV, who was hired to conduct the City's 2018 audit, has completed the 2018 Audit Report and Dean Birkeland of Carlson SV will present the report at the Council meeting. A link to the 2018 Audit Report is provided with the agenda packet on the website.

**COUNCIL ACTION REQUESTED:**

**Motion regarding the adoption of the audited financial statements and financial information for the fiscal year ending December 31, 2018.**

**City of Afton**
**3033 St. Croix Trl, P.O. Box 219**
**Afton, MN 55001**

# Meeting Date August 20, 2019

# Council Action Memo

To: Mayor Palmquist and City Council Members

From: Ron Moorse, City Administrator

Date: August 12, 2019

Re: City Docks Rehabilitation

---

The support structure of the City Docks has deteriorated over time and is not able to adequately support the docks. Ken Johnson, Public Works Supervisor, has been working with the original fabricator and installer of the docks, MEECO, and the general managers of both Windmill Marina and Afton Marina, to obtain advice regarding how best to address the deficiencies. Based on this process, it was determined the best long term solution was to replace the existing support structure with a new support structure with heavier gauge steel and to add corner walks at the corners where the docks are connected to the support structure. The installation of the new support structure would occur in the winter, so that the support structure can be supported by the ice while it is connected to the docks.

Meeco has provided a price quote for the fabrication of the new support structure and all necessary hardware, and technical assistance regarding the installation of the support structure. Windmill Marina and Afton Marina have each provided price quotes for the installation of the new support structure. The price quotes are attached. The costs are as follows:

| | | |
|---|---|---|
| Fabrication of Support Structure and Technical Assistance (Meeco Sullivan) | $28,050 | $28,050 |
| Installation of Support Structure (Windmill Marina) | $37,960 | |
| Installation of Support Structure (Afton Marina) | | $21,400 |
| Total | **$66,010** | **$49,450** |

The total cost of replacing the support structure for the docks ranges from $49,450 to $66,010, depending upon which marina is selected to perform the installation.

Funding for the City Docks Rehabilitation project would come from the City Docks Fund, which was established to accumulate funding for capital improvements or replacement of the docks using the revenue received from the lease of the City Docks by the Afton St. Croix Company. The annual lease payment is $3,850. The current balance in the City Docks Fund is $70,271.

In response to a request from Council member Wroblewski, staff requested the Afton St. Croix Co. to provide information regarding the rates for slip rental, the slip rental revenue for 2018, and the number of boats that used the City Docks in 2018. Attached is the report received in response to the request.

**COUNCIL ACTION REQUESTED:**

- **Motion regarding the price quote from Meeco Sullivan for the fabrication of the new dock support structure in the amount of $28,050.**
- **Motion regarding the selection of a price quote for the installation of the new dock support structure.**

| Bidder: | Windmill Marina Association Inc | |
|---|---|---|
| Address: | 16065 32nd St S | Telephone No.: 651 436 7744 |
| City, State, Zip: | Afton MN, 55001 | Fax No.: 651 436 1832 |

## QUOTE FORM

AFTON CITY DOCK REPAIRS
CITY OF AFTON, MN

| No. | Item | Units | Quantity | Unit Price | Total Price |
|---|---|---|---|---|---|
| 1 | DEMOLITION AND DISPOSAL | LUMP SUM | 1 | $ 7904 | $ 7904 |
| 2 | FLOAT REMOVAL TO FACILITATE CENTER STABILIZER INSTALLATION | LUMP SUM | 1 | $ 1368 | $ 1368 |
| 3 | CENTER TRUSS STABILIZER ASSEMBLY | LUMP SUM | 1 | $ 8000 | $ 8000 |
| 4 | FLOAT INSTALLATION AFTER CENTER STABILIZER INSTALLATION | LUMP SUM | 1 | $ 1368 | $ 1368 |
| 5 | OUTSIDE TRUSS STABILIZER ASSEMBLY | LUMP SUM | 1 | $ 8000 | $ 8000 |
| 6 | DRILLING OF DOCK FRAME | LUMP SUM | 1 | $ 1520 | $ 1520 |
| 7 | MAKE MINOR REPAIRS TO FRAMING AS NEEDED | LUMP SUM | 1 | $ 4000 | $ 4000 |
| 8 | CORNER WALK INSTALLATION | LUMP SUM | 1 | $ 4500 | $ 4500 |
| 9 | CLEAN UP AND DEMOBILIZATION | LUMP SUM | 1 | $ 1300 | $ 1300 |
| | | | | TOTAL | $ 37,960 |

*** Total cost reflects latest Meeco Sullivan proposal of 8/12/19

This project consists of repairing the Afton City Docks. This bid consists of providing the labor and installation supplies necessary to repair the City docks while utilizing the materials supplied by the City as shown on the attached sheet. Any materials necessary to complete the repairs outside of the attached list are considered included to the repairs and should be incorporated into the proposed unit prices of the bid items above.

If a corporation, what is the state Minnesota

If a partnership, state full name of all co-partners

Official Address
16065 32nd St South PO Box 279
Afton, MN, 55001

Date: 14 Aug 19

Firm Name Windmill Marina Association INC

By
(An Authorized Signature)

| | |
|---|---|
| Bidder: Afton Marina + Yacht Club Inc. | |
| Address: 16071 31st S. | Telephone No.: 651-436-4884 |
| City, State, Zip: Afton MN 55001 | Fax No.: 651-780-7004 |

**QUOTE FORM**

AFTON CITY DOCK REPAIRS

CITY OF AFTON, MN

| No. | Item | Units | Quantity | Unit Price | Total Price |
|---|---|---|---|---|---|
| 1 | DEMOLITION AND DISPOSAL | LUMP SUM | 1 | $ | $ 3,400 |
| 2 | FLOAT REMOVAL TO FACILITATE CENTER STABILIZER INSTALLATION | LUMP SUM | 1 | $ | $ — |
| 3 | CENTER TRUSS STABILIZER ASSEMBLY | LUMP SUM | 1 | $ | $ 6,000 |
| 4 | FLOAT INSTALLATION AFTER CENTER STABILIZER INSTALLATION | LUMP SUM | 1 | $ | $ — |
| 5 | OUTSIDE TRUSS STABILIZER ASSEMBLY | LUMP SUM | 1 | $ | $ 6,000 |
| 6 | DRILLING OF DOCK FRAME | LUMP SUM | 1 | $ | $ — |
| 7 | MAKE MINOR REPAIRS TO FRAMING AS NEEDED | LUMP SUM | 1 | $ | $ 2,000 |
| 8 | CORNER WALK INSTALLATION | LUMP SUM | 1 | $ | $ 4,000 |
| 9 | CLEAN UP AND DEMOBILIZATION | LUMP SUM | 1 | $ | $ — |
| | | | | TOTAL | $ 21,400 |

Labor Only. All materials will be supplied by customer.

This project consists of repairing the Afton City Docks. This bid consists of providing the labor and installation supplies necessary to repair the City docks while utilizing the materials supplied by the City as shown on the attached sheet. Any materials necessary to complete the repairs outside of the attached list are considered included to the repairs and should be incorporated into the proposed unit prices of the bid items above.

If a corporation, what is the state Minnesota

If a partnership, state full name of all co-partners

Official Address

16071 31st S

Afton, MN 55001

Date: 12 Aug 2019

Firm Name Afton Marina + yacht Club Inc

By

(An Authorized Signature)

General Manager

**Meeco Sullivan, LLC**
*Meeco Division*
1501 E. Electric Avenue
McAlester, OK 74501
Phone: (918) 423-6833
Fax: (918) 423-3215

# Sales Order

**Date:** 8/15/2019

| **Customer ("Buyer")** | **Ship To (if different from Buyer)** |
|---|---|
| City of Afton | |
| 3033 St. Croix Trail S | SAME |
| Afton, MN 55001 | |
| Customer Contact: Ken Johnson | Site Contact: |
| Customer Email: publicworks@ci.afton.mn.us | Site Email: |
| Customer Phone Number 651-436-5090 | Site Phone Numbe |
| Customer Fax Number: | Payment terms: 50% Due with signed Sales Order. 50% Due upon shipment |
| Customer P.O. #: | |

***Approved Drawings Required:*** ***Yes*** **Tax Rate:** 0.000%

| Part No. | Quantity | Description | Sale Price | Extended Price |
|---|---|---|---|---|
| | 1 | (40) underwater column angles - 2-1/2" x 2-1/2" x 5/16" angle | $ 21,390.00 | $ 21,390.00 |
| | | (6' clearance) | | $ - |
| | | (36) underwater angle braces - 2-1/2" x 2-1/2" x 1/4" angle | | $ - |
| | | (40) full frame underwater column adaptor plates - 6" x 1/2" plate | | $ - |
| | | (366') Underwater truss - 2" x 2" x 1/4" angle | | $ - |
| | | (4) 4' x 4' full frame (southern yellow pine decking) | | $ - |
| | | (8) 4' x 4' top frame cornerwalks (southern yellow pine decking) | | $ - |
| | | (4) 3' x 3' full frame cornerwalks (southern yellow pine decking) | | $ - |
| | 1 | (20) 3' x 4' x 24" deep floats to replace existing floats | $ 2,980.00 | $ 2,980.00 |
| | | **Includes pre-fabrication site visit by Meeco representative | | $ - |
| | | **Includes site visit by Meeco representaive to begin installation | | $ - |
| | | ***For additional item detail, see attached page*** | (total addt'l amount) | $ - |
| | | | Total Sales Price | $ 24,370.00 |
| | | | Discount | $ - |
| | | | Subtotal | $ 24,370.00 |
| | | | Freight | $ 3,680.00 |
| | | | Tax | $ - |
| | | | Total Due | $ 28,050.00 |
| | | | *Downpayment Req'd* | *$ 14,025.00* |

Special Instructions:

**DRAWINGS ATTACHED - Plan# 6143A
Includes hardware for all of the above
all hardware for the underwater truss and adaptor plates to be 5/8"
all hardware for the cornerwalk to frames to be 1/2"
cornerwalks include syp wood decking, single 2" x 6" syp sidewood and vinyl bumper

The attached terms and conditions are incorporated herein and form part of this agreement.

To confirm this order and start production and/or shipping, Meeco Sullivan requires a signed Sales Order, down payment (if indicated above) and an approved drawing (if indicated above). Buyer agrees to purchase the above referenced products pursuant to the terms stated herein. The front and back of this Sales Order comprise the entire agreement between the parties. All other conditions including scheduled delivery date are subject to

Authorized Signature: _____ Date: _____

Name: _____ Title: _____

# EXHIBIT A-1

MEECO SULLIVAN
THE MARINA COMPANY
CONTRACT DOCUMENT
☐ APPROVED, NO EXCEPTIONS OBSERVED
☐ APPROVED AS NOTED
☐ REVISED AS NOTED AND RESUBMIT
DATE_____BY_____

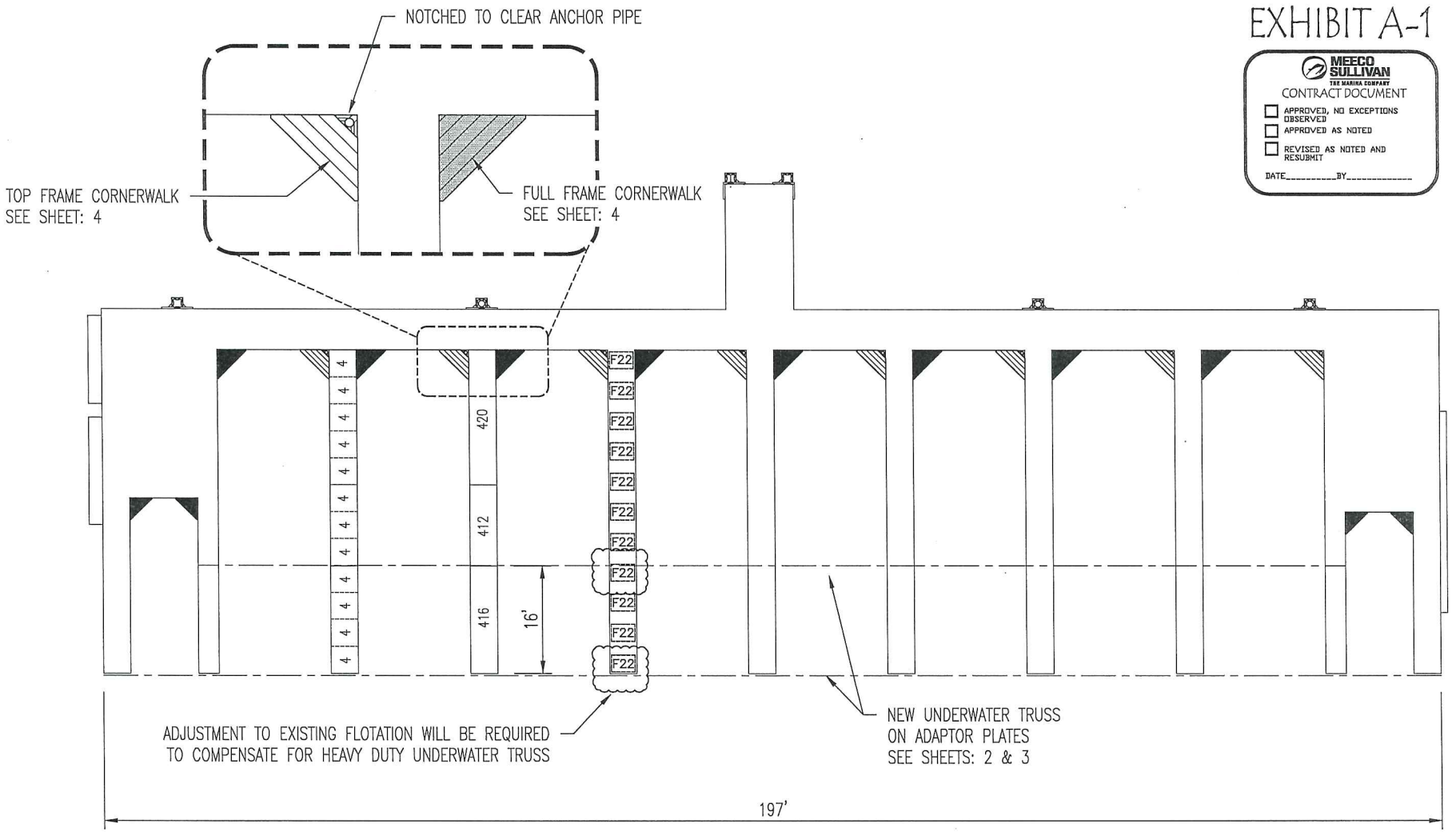


| NO. | REVISION DESCRIPTION | BY | DATE |
|---|---|---|---|
| | | | |
| | | | |
| | | | |
| | | | |

Note: This document contains proprietary information of MS–TMC, . Its receipt or possession does not convey any rights to reproduce, disclose its contents, or to manufacture, use, or sell anything it may describe. Reproduction, disclosure, or use, without specific written authorization is strictly forbidden.

MEECO SULLIVAN
THE MARINA COMPANY
1501 E. ELECTRIC AVE. Phone: (918) 423–6833
McALESTER, OKLAHOMA, USA 74501 Fax: (918) 423–3215

| | | |
|---|---|---|
| DRAWN BY: DPW | FILE NAME: 6143A-1 | |
| CHECKED BY: | JOB # | PLAN # 6143A |
| SCALE: 0.005897 | DATE: 8/5/19 | SHEET 1 |

**CITY OF AFTON**
AFTON, MN

M:\ARCHIVE\6100\6143A-City of Afton-UW truss repair\6143A-1.dwg, 1, 8/15/2019 11:30:47 AM

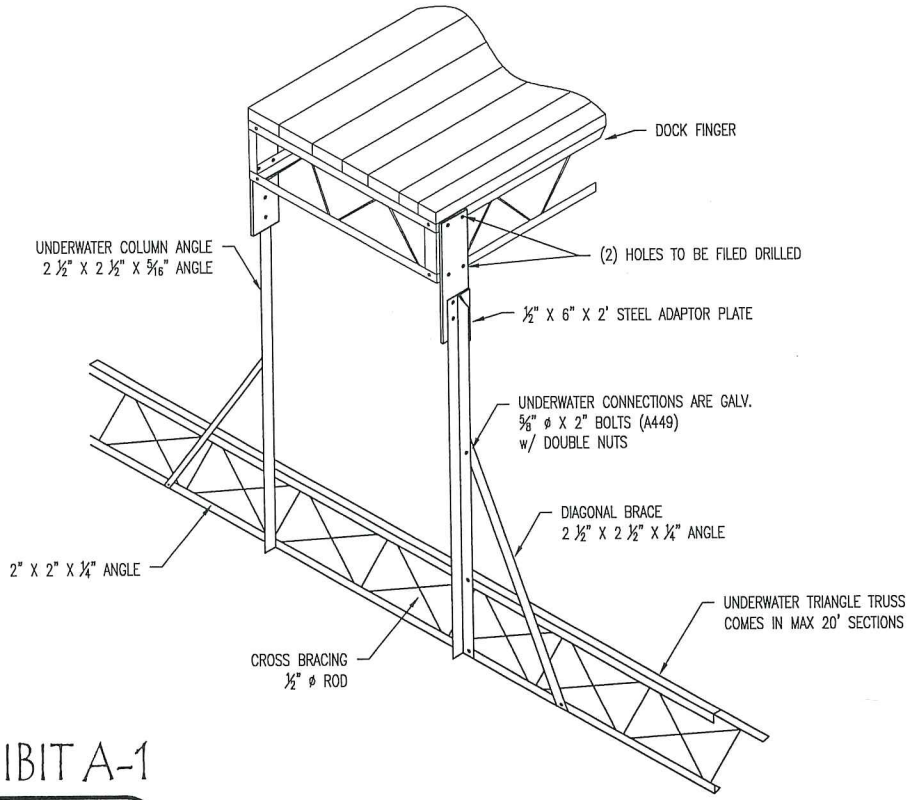


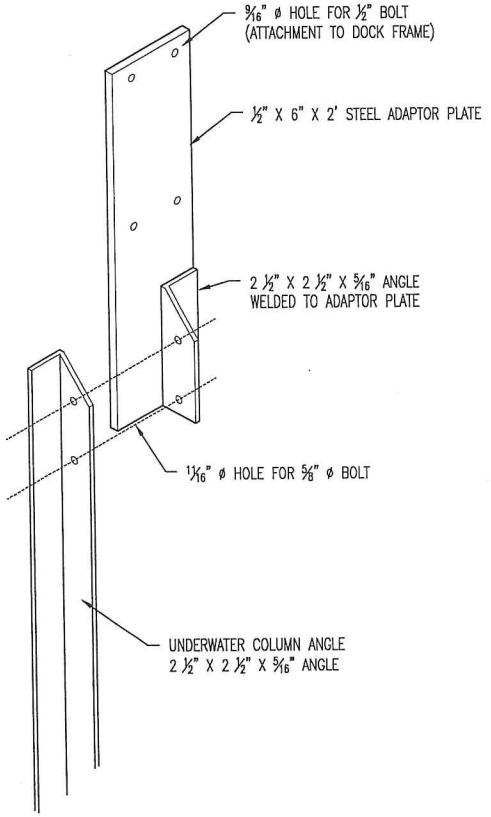


# EXHIBIT A-1

MEECO SULLIVAN
THE MARINA COMPANY
CONTRACT DOCUMENT

- ☐ APPROVED, NO EXCEPTIONS OBSERVED
- ☐ APPROVED AS NOTED
- ☐ REVISED AS NOTED AND RESUBMIT

DATE_____BY_____

## UNDERWATER TRUSS DETAIL

## ENLARGEMENT OF ADAPTOR PLATE

| NO. | REVISION DESCRIPTION | BY | DATE |
|---|---|---|---|
| | | | |
| | | | |
| | | | |
| | | | |

Note: This document contains proprietary information of MS-TMC, . Its receipt or possession does not convey any rights to reproduce, disclose its contents, or to manufacture, use, or sell anything it may describe. Reproduction, disclosure, or use, without specific written authorization is strictly forbidden.

MEECO SULLIVAN
THE MARINA COMPANY
1501 E. ELECTRIC AVE.
McALESTER, OKLAHOMA, USA 74501
Phone: (918) 423-6833
Fax: (918) 423-3215

| | | |
|---|---|---|
| DRAWN BY: DPW | FILE NAME: 6143A-1 | |
| CHECKED BY: | JOB # | PLAN # 6143A |
| SCALE: 1/2" = 1'-0" | DATE: 12/20/12 | SHEET 2 |

CITY OF AFTON
AFTON, MN

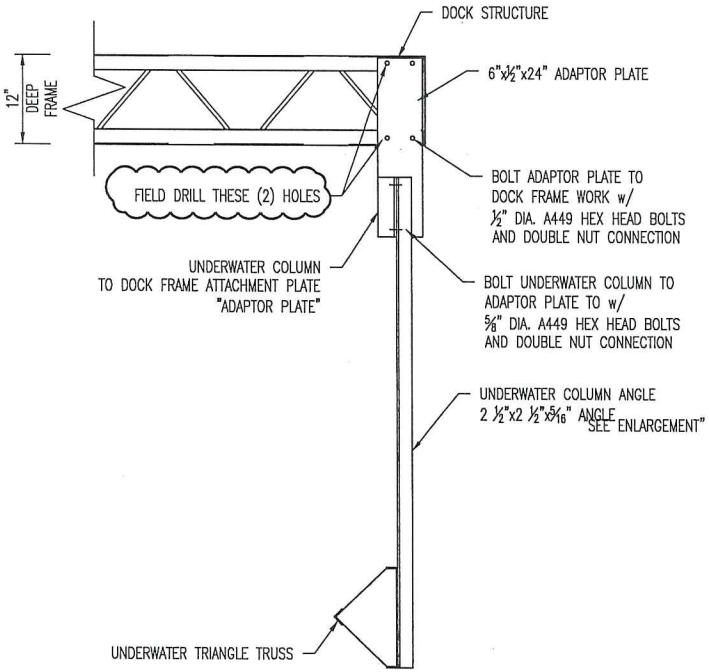


ADAPTOR PLATE ASSEMBLY DETAIL
END OF FRAME

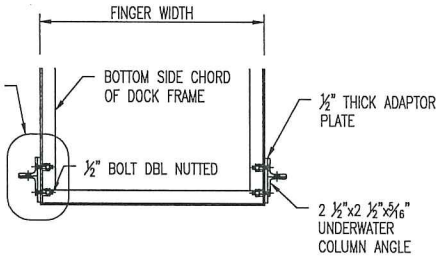


TOP VIEW OF A PAIR OF ADAPTOR PLATES

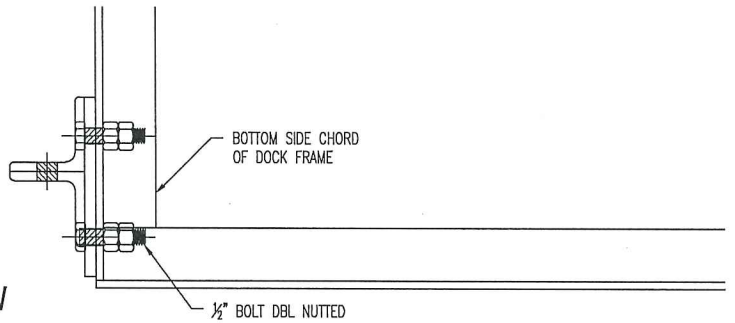


ENLARGEMENT TOP VIEW

# EXHIBIT A-1

MEECO SULLIVAN
THE MARINA COMPANY
CONTRACT DOCUMENT

- ☐ APPROVED, NO EXCEPTIONS OBSERVED
- ☐ APPROVED AS NOTED
- ☐ REVISED AS NOTED AND RESUBMIT

DATE_____BY_____

# UNDERWATER TRUSS FINGER END

| NO. | REVISION DESCRIPTION | BY | DATE |
|---|---|---|---|
| | | | |
| | | | |
| | | | |
| | | | |

Note: This document contains proprietary information of MS-TMC, . Its receipt or possession does not convey any rights to reproduce, disclose its contents, or to manufacture, use, or sell anything it may describe. Reproduction, disclosure, or use, without specific written authorization is strictly forbidden.

MEECO SULLIVAN
THE MARINA COMPANY
1501 E. ELECTRIC AVE. McALESTER, OKLAHOMA, USA 74501
Phone: (918) 423-6833
Fax: (918) 423-3215

| | | |
|---|---|---|
| DRAWN BY: DPW | FILE NAME: 6143A-1 | |
| CHECKED BY: | JOB # | PLAN # 6143A |
| SCALE: 1:16 | DATE: 12/20/12 | SHEET 3 |

CITY OF AFTON
AFTON, MN

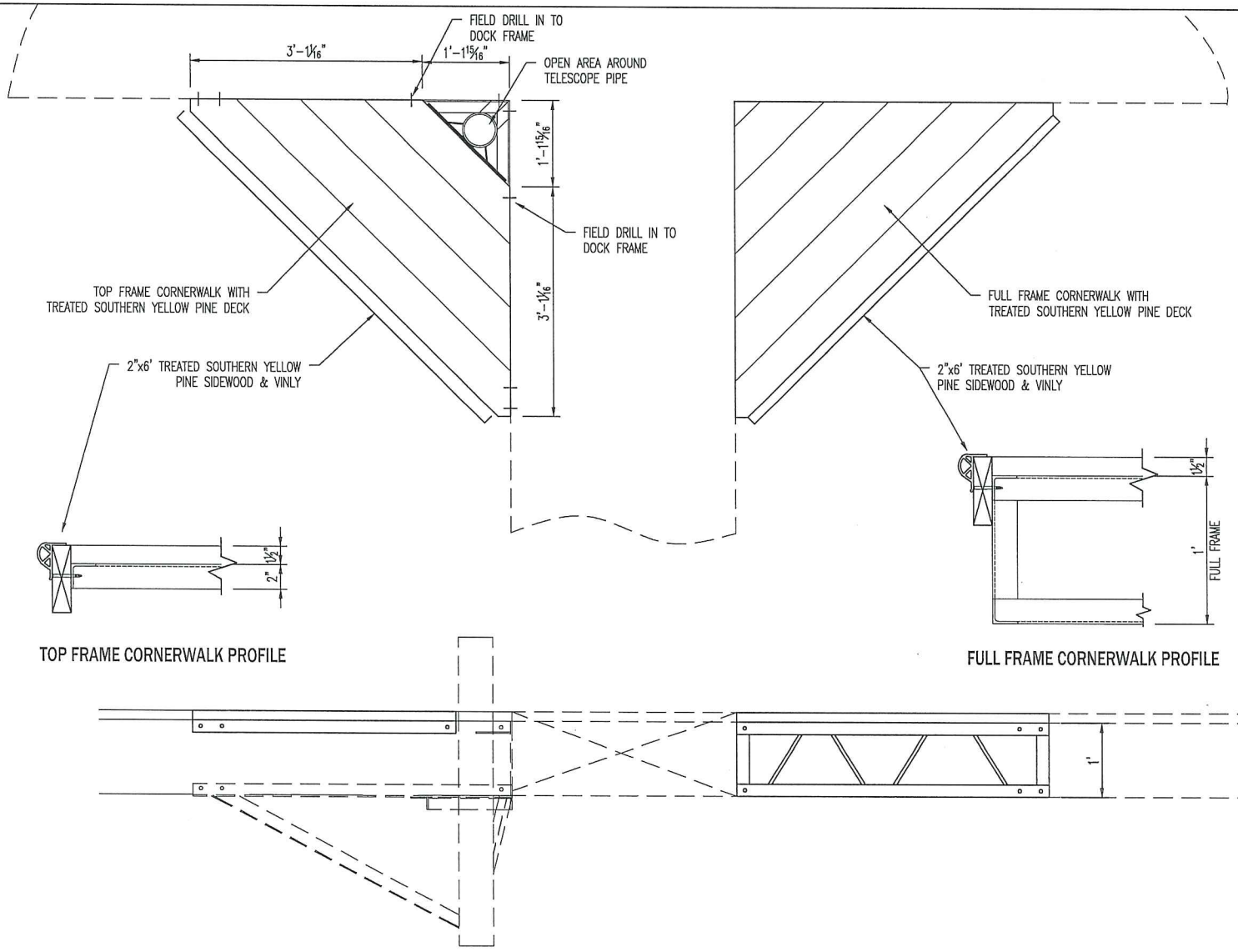


TOP FRAME CORNERWALK PROFILE

FULL FRAME CORNERWALK PROFILE

| NO. | REVISION DESCRIPTION | BY | DATE |
|---|---|---|---|
| | | | |
| | | | |
| | | | |
| | | | |

Note: This document contains proprietary information of MS-TMC, . Its receipt or possession does not convey any rights to reproduce, disclose its contents, or to manufacture, use, or sell anything it may describe. Reproduction, disclosure, or use, without specific written authorization is strictly forbidden.

MEECO SULLIVAN
THE MARINA COMPANY
1501 E. ELECTRIC AVE. McALESTER, OKLAHOMA, USA 74501
Phone: (918) 423-6833 Fax: (918) 423-3215

| | | |
|---|---|---|
| DRAWN BY: DPW | FILE NAME: 6143A-1 | |
| CHECKED BY: | JOB # | PLAN # 6143A |
| SCALE: 1:16 | DATE: 12/20/12 | SHEET 4 |

CITY OF AFTON
AFTON, MN

© 2018 Google
Google E

Afton City Docks
Income Statement

| Actual Expenses | # of Boats | 2018 | # of Boats | 2017 |
|---|---|---|---|---|
| Lease | | -3850 | | -3850 |
| Maintenance | | -3000 | | -3500 |
| Storage In/Out | | -600 | | -600 |
| Utilities | | -120 | | -120 |
| Labor | | -8450 | | -7958 |
| Insurance | | -4500 | | -4500 |
| **Total Expenses** | | **-20520** | | **-20528** |
| Boat counts $5 | 2,150 | 10,750 | 1,590 | 7,950 |
| OverNight $20 | 12 | 240 | 6 | 120 |
| **Total Income April-Sept** | | **10,990** | | **8,070** |
| **Net Income** | | **-9,530** | | **-12,458** |

COPY

# AFTON CITY DOCKS AGREEMENT

## 1. Parties to Agreement

This Afton City Docks Agreement ("Agreement") is made and entered into between the following parties:

(a) The City of Afton ("City"), a municipal corporation organized and existing under the laws of the State of Minnesota, whose business office is located at 3033 St. Croix Trail South, P.O. Box 219, Afton, Minnesota 55001; and

(b) Afton St. Croix Company ("Afton St. Croix"), a Minnesota corporation engaged in the business of operating docking facilities, whose principal business office is located at 3291 South St. Croix Trail, Afton, Minnesota 55001. .

## 2. Purpose of Agreement

The purpose of this Agreement is to permit, under lease from the City and subject to the terms and conditions stated herein, Afton St. Croix to use certain City property, including the property commonly known as the City's 33rd Street Docks ("Afton City Docks"), in operating docking facilities for its customers and visitors to the City; thereby allowing the City to maintain without direct expense to the City a valuable public amenity which benefits City residents, visitors and neighbor communities.

## 3. Property to be Leased

Subject to the terms and conditions stated herein, the City agrees to lease to Afton St. Croix:

(a) the City's rights to operate the Afton City Docks under the following permits as such permits relate to docks for ten (10) slips at the east end of 33rd Street in the City of Afton, Minnesota: permit from the United States Army Corps of Engineers dated June 12, 1981 (ACE No. 81-53-05) and permit from the Minnesota Department of Natural Resources (DNR No. 83-6166), including the City's dock and ten (10) slips structure with use of outside fingers and head pier, and the City's six foot by 45 foot walking ramp with landing connected to the docks; and

(b) the right to the non-exclusive use for access and parking related to its operation of the Afton City Docks the following real property:

That part of the public street right-of-way, known as realigned 33rd Street legally described as follows: commencing at the northwest corner of Government Lot 6, thence South 0" 42'08" E bearing assumed along the West line of said

Government Lot 6, a distance of 348.26 feet to point of beginning, thence South 87" 53'42 E a distance of 700 feet, thence South 02"06'08" W 80', thence North 87" 53'52" W, a distance of 698.08' to the West line of said Government Lot 6, thence North 0" 42'08" W 80.10' to the point of beginning.

All such property together referred to herein as the "Leased Property".

## 4. Payments to be Made in Consideration for Leased Property

In consideration for the City agreeing to lease the Leased Property to it, Afton St. Croix agrees to make the following payments to the City:

The sum of Ninety-Nine Thousand Seven Hundred and 00/100 Dollars ($99,700), payable in installments as listed below:

| | |
|---|---|
| July 15, 2003: | $15,000 (receipt of which is acknowledged by the City) |
| May 15 each year | $3,850 annually from 2007 through 2029 |

The City shall send a statement requesting payment due hereunder to Afton St. Croix ten (10) days prior to each payment due date and Afton St. Croix shall make payment within ten (10) days of its receipt of the City's statement but no earlier than the due date as set forth above. If payment is not received by the City by its due date described above, the City shall send a second statement requesting payment due hereunder by certified mail return receipt requested and Afton St. Croix shall pay the statement with ten (10) days of its receipt.

The City and Afton St. Croix understand and acknowledge that any payments received by the City hereunder will be deposited into an Afton City Docks Capital Reserve Fund to be used for capital improvements or replacements to the Afton City Docks.

In addition to the annual payments due as described above, Afton St. Croix shall be responsible for paying any utility expenses incurred in connection with operation of the Afton City Docks.

## 5. Rights and Restrictions in Connection with Use of Leased Property

(a) Afton St. Croix is hereby given the right and responsibility to use the Afton City Docks for the temporary or transient dockage of water craft for those boaters wishing to patronize any of the businesses in the Old Village District of the City, or to visit any other person or place within the City. Except as otherwise permitted in this section, "temporary or transient" shall be defined to mean that such boats shall be docked sporadically for no more than four (4) consecutive hours except for those slips for which a reservation has been made. Boats with slip reservations shall have a time limit of twelve (12) hours. The Afton City Docks shall be used for dockage only, and no other service, including, but not limited to furnishing of water, holding

tank pumping, fuel, or the sale of food or beverage, shall be allowed on or at the Afton City Docks or the Leased Property except as expressly provided herein.

This section shall not prohibit Afton St. Croix from allowing the catering of food or beverages, prepared and sold elsewhere, to the boaters utilizing the Afton City Docks, if that can be done in the discretion of Afton St. Croix without undue disruption arising from excess parking and traffic problems in the area of the Afton City Docks. As compensation for the additional expense of administrating and supervising such catering, Afton St. Croix may charge a catering service fee of not more than $25 per catered trip, in addition to the dockage charges set out in Section 7 of this Agreement. The City and Afton St. Croix mutually agree to negotiate new catering service fee rates in the future on an annual basis. Further, this section shall not prohibit the supplying of electrical hook-ups on the Afton City Docks. This section does prohibit the dockage of charter boats, the purpose of which is to load passengers for charters, unless the owner of the charter boat owns or leases real estate within the City which is sufficient for all parking used by the charter passengers and unless the owner of the charter boat complies with Subsection (c) below.

(b) Afton St. Croix is hereby given the non-exclusive right to use the land premises described herein above for access to the Afton City Docks by pedestrians and motor vehicles, and the parking of not more than five (5) motor vehicles. No parking of motor vehicles shall be allowed from 1:30 a.m. to 7:00 a.m.

(c) Afton St. Croix shall abide by the following rules for charter boats docking at the Afton City Docks:

(1) charter boats shall use the Afton City Docks for a reasonable time for loading and unloading purposes only.

(2) buses may load and unload only at the Afton City Docks and shall park at a site permitted by the City or on Afton St. Croix's property.

(3) subject to subsection (a) above, charter boats shall be permitted to use the Afton City Docks seven (7) days a week, including legal holidays.

(4) those rules and restrictions relating to the operation of the Afton City Docks contained in the September 21, 1999 Amendment to Agreement between the City of Afton and Windmill Marina Association, Inc., which is incorporated by reference herein and attached hereto as Exhibit 1; except as otherwise specifically provided herein, and except that Sunday brunch cruises for the individual public is permitted from April through November.

(d) Overnight docking at the Afton City Docks shall be subject to the following:

(1) Rules and Regulations
(i) overnight docking customers shall register with the dock attendant and the receipt of registration shall be visibly displayed on the customer's boat for inspection by the dock attendant and Afton St. Croix's security service.

(ii) overnight docking shall be for a period of not longer than 48 hours. (iii) disturbing noises by overnight docking customers must be kept to a minimum. Unreasonable noise, including use of main engines, generators and noise making equipment is prohibited between 11:00 pm and 8:00 am (except for entering and leaving the Afton City Docks).

(2) overnight docking shall be limited to five (5) boats per night.

**6. Maintenance and Operation of the Leased Property**

(a) Hours of Operation. Afton St. Croix shall have the Afton City Docks staffed with a dock attendant as reasonably needed for safe and efficient operation of the Afton City Docks between the hours of 10:00 a.m. to 1:00 a.m. The dock attendant shall not have to be present during periods of inclement weather when it is expected that the Afton City Docks will not be utilized. The dock attendant shall be an employee of Afton St. Croix and shall be Afton St. Croix's agent for purposes of enforcing the provisions of this Agreement.

(b) Lighting and Payment for Utilities. The City shall install and maintain and operate street lights (no less than two lights) in the parking area adjacent to the Afton City Docks. It is understood that the payments to be made by Afton St. Croix as set forth in Section 4 shall include the costs incurred by the City in maintaining and operating such street lights, and Afton St. Croix shall remain at all times responsible for paying any utility expenses incurred in connection with operation of the Afton City Docks. Afton St. Croix is authorized to install whatever electrical metering and service equipment is necessary with regard to operating of the Afton City Docks and the City shall cooperate in making available to Afton St. Croix any existing utility poles and connection services which would be in place and pertaining to the street lights described herein.

(c) Signs. Afton St. Croix shall not erect or permit to be erected on the Leased Property any signs. The City will place signs on the Leased Property as reasonable necessary as warnings and directions for the safe operation of the Afton City Docks so long as such signs do not violate any ordinances or regulations by any governmental agency. If any existing sign is retained, it shall be repainted at Afton St. Criox's expense to indicated that the Afton City Docks are owned by the City. Any sign shall also display the name and telephone number of Afton St. Croix as the operator of the Afton City Docks. The format of the sign shall be approved by the City before it is painted.

(d) Reservation for Dockage. Dockage by boaters shall be available on a first come, first serve basis, provided that with regard to one-half of the slips, boaters may make reservations for dockage in advance. The time limit for reservations shall be seven (7) days prior to the reservation date. A reservation book shall be kept with the slip number, date and time the reservation is made, date and time for which the slip is reserved, and name and phone number of the person making the reservation.

(e) Standards of Operation/Indemnification/Insurance. Afton St. Croix shall operate,

maintain and repair the Leased Property to a reasonable standard of safety and to the same condition as they exist at the commencement of this Agreement, normal wear and tear excepted. Afton St. Croix shall not be responsible, except for maintaining insurance as described below, for any damage caused by extraordinary events such as, but not limited to, flooding, fire, and weather-caused damage. The City shall remain responsible for repairs and replacement of the Leased Property for damage caused by natural disasters. Afton St. Croix shall operate the Leased Property in accordance with the provisions of this Agreement and all applicable laws and ordinances.

Afton St. Croix shall fully indemnify, hold harmless and defend the City, its officers and employees from any and all damages, claims, losses, judgments, suits or expenses on account of claims of whatever nature, or injury to persons or property arising out of or connected with the operation, maintenance or repair of the Leased Property as described in this Agreement. Afton St. Croix shall maintain and pay all premiums and expenses for public liability insurance, naming the City as an additional insured, such insurance to be for not less than Five Hundred Thousand Dollars ($500,000), and property damage insurance on the Leased Property and improvements thereto for their insurable value, but not less than One Hundred Twenty Five Thousand Dollars ($125,000). Any insurance policy procured hereunder shall provide for at least thirty (30) days written notice to the City prior to cancellation or material modification. Afton St. Croix shall furnish to the City a certificate of such insurance.

(f) Winter Storage of City's Dock and Slips Structure. During the term hereof, Afton St. Croix shall provide winter storage for the City's docks and slips structure where they shall be protected from the wind and currents and ice of the St. Croix River during the spring break-up of winter ice. The dock and slips structure shall be stored from approximately November 15 until April 15 of the following year, depending upon availability of harbor space and tow boat services. All costs of storage and transportation to and from storage harbor shall be the responsibility of and paid by Afton St. Croix.

(g) Maintenance of Leased Property. Afton St. Croix accepts the Leased Property "as is" and shall maintain same in a safe state of repair at its sole cost and expense. Afton St. Croix shall not make nor suffer any waste thereon, nor allow liquor or intoxicating beverages to be sold thereon, provided however, nothing prohibits the catering of food or beverages as allowed in Section 5 above. The parties hereto agree and understand that the parking area leased herein is a part of the public right-of-way of 33rd Street, and that the portion of 33rd Street west of the described premises and east of the intersection with Front Street is currently granted by easement to a third party for its exclusive use on either side of the asphalt road surface and for the winter storage of boats, none of which street is deemed to be improved as a city street at the present time, but is a public right-of-way and Afton St. Croix, together with all members of the public, will have rights of passage into the Leased Property. The City does not hereby undertake any obligation to perform any maintenance of the Leased Property or incur any expense whatsoever in connection with the Leased Property except as expressly provided herein. Afton St. Croix may, at its option, add gravel to the parking area on the Leased Property and grade said area as necessary for driving and parking thereon; provided however, that Afton St. Croix is not hereby required to upgrade the Leased Property; and provided, further, that Afton St. Croix shall not

construct nor install improvements or fixtures of a temporary or permanent nature on the Leased Property or otherwise alter the condition of the Leased Property without the prior written consent of the City.

(h) Inspection. With twenty-four (24) hours written notice to Afton St. Croix, the City reserves the right to come upon the Leased Property to inspect the Leased Property and the required records for compliance herewith at any time.

**7. Dockage Charges Permitted in Connection with Leased Property.**

Any dockage charges to be assessed boaters for use of the Afton City Docks during each boating season during the term of this Agreement shall be in accordance with a schedule of charges determined by Afton St. Croix and approved by the City prior to the commencement of each boating season, This schedule of charges shall be adopted and published no later than April 15 of each year. Beginning with the 2003 boating season, Afton St. Croix shall charge a docking fee of $5.00 per hour for non-residents of the City and $3.00 per hour for residents of the City for non-overnight use of the Afton City Docks, and a $20.00 flat fee docking charge for overnight use of the Afton City Docks between the hours of 10:00 pm to 10:00 am. The City and Afton St. Croix mutually agree to negotiate new docking fee rates in the future on an annual basis. All fees arising from dockage charges shall be retained entirely by Afton St. Croix.

**8. Term of Agreement/Termination.**

(a) Term. This Agreement shall run from January 1, 2004 until December 31, 2029, unless sooner terminated as provided herein.

(b) Termination. This Agreement may be terminated before the expiration of its term as follows:

(1) by mutual consent of both parties.

(2) by two (2) years prior written notice to the City that Afton St. Croix intends to terminate the Agreement.

(3) by written notice to Afton St. Croix that the City is terminating this Agreement because of a Material Breach of this Agreement by Afton St. Croix. For purposes of this subsection, "Material Breach" shall mean:

(i) failure by Afton St. Croix to make any payment, or part thereof, required under Section 4 herein within ten (10) days after service of notice of failure to make payment has been given by the City.
(ii) failure by Afton St. Croix to maintain insurance as specified herein for two (2) consecutive business days after service of notice to maintain insurance has been given by the City.

(iii) failure by Afton St. Croix to perform any other covenant or condition of this Agreement required on the part of Afton St. Croix that is not cured within ten (10) days after service of notice of failure to perform has been given by the City.

No Material Breach shall be deemed waived unless in writing and signed by the City, except that a Material Breach under Subsection 8(b)(3)(i) hereof shall be deemed waived if such Material Breach is made good before notice of termination of this Agreement is served upon Afton St. Croix.

In the event of a Material Breach by Afton St. Croix, and at any time thereafter, the City may serve a written notice upon Afton St. Croix that the City elects to terminate this Agreement upon a specified date no less than five (5) days after the date of the serving of such notice, and this Agreement shall then terminate on the date so specified as if that date had been originally fixed as the expiration date of the term herein granted. A Notice of Material Breach and/or Notice of Termination shall be in writing and mailed to Afton St. Croix by sending such notice by certified mail return receipt requested to Afton St. Croix Company, c/o Afton House Inn, 3291 South St. Croix Trail, Afton, Minnesota 55001.

It is agreed and understood that Afton St. Croix is not hereby acquiring any vested rights or interests in the nature of a franchise, and the City's termination of this Agreement pursuant to the procedures as provided herein shall not subject the City to any claim of Afton St. Croix for damages.

(c) Surrender. Upon the expiration or termination of this Agreement, Afton St. Croix shall immediately surrender possession of the Leased Property in substantially the same condition of the Leased Property as at the commencement hereof, with reasonable wear and tear excepted.

**9. General Terms and Conditions**

(a) Restriction on Assignment/Subletting. Neither this Agreement nor any right, interest or obligation hereunder held by Afton St. Croix may be assigned or transferred by Afton St. Croix to another without the express written consent of the City.

(b) Ownership of the Leased Property. Except for the specific and limited leasehold interest granted Afton St. Croix herein, the City retains all right, title and interest in the Leased Property. Any contributions toward building of the Afton City Docks made by Afton St. Croix shall not be deemed to grant to it or any other individual, firm, business, corporation or entity, any vested right in or to the Leased Property, nor to their continued use for any specific purpose,

save and except for such rights as may be granted pursuant to this Agreement, and the obligation of the City to use all of its assets and right-of-ways for authorized public purposes.

(c) Governing Law. This Agreement shall be governed and construed by the substantive laws of the State of Minnesota.

(d) Amendment or Modification of this Agreement. This Agreement is the entire agreement of the parties and supersedes any prior agreements between them, whether written or oral, with respect to the subject matter hereof. No waiver, alteration, modification or amendment of any provisions of this Agreement shall be binding unless in writing and signed by both parties. The invalidity or unenforceability of any provision of this Agreement, or any terms thereof, shall not affect the validity of this Agreement as a whole, which shall at all times remain in full force and effect.

**Agreed to by the undersigned duly authorized representatives of each party:**

**On behalf of the**
**City of Afton**

Charlie D. Devine
Mayor of Afton

Date: Nov 25. 03

David Engstrom

Interim City Administrator

Date: Nov 25. 03

**On behalf of**
**Afton St. Croix Company**

Garold Jarvis, President

Date: Nov 25, 03

**City of Afton**
**3033 St. Croix Trl, P.O. Box 219**
**Afton, MN 55001**

# Meeting Date August 20, 2019

# Council Action Memo

To: Mayor Palmquist and City Council Members

From: Ron Moorse, City Administrator

Date: August 15, 2019

Re: Levee Erosion Repair and Erosion Control Options

---

The high water on the river deposited debris along the levee and caused erosion along the levee. The debris needs to be removed and the erosion needs to be repaired, along with installing an erosion control blanket and seeding, by late this summer. This would enable the new vegetation to get established this fall, so that it is in place for possible high water next spring. Tri County Services has provided a price quote of $15,000 to remove the debris and repair the erosion, and is preparing a price quote for installing erosion control blanket and seed. Most or all of this cost could be reimbursed by the Federal Emergency Management Agency (FEMA). With the seeding option, the levee will be subject to additional erosion and reseeding with another high water event, particularly if the seed does not get fully established prior to a high water event, or if the vegetation does not survive a high water event, particularly an extended event such as was experienced this year.

Another option, that would provide a long term solution, is installing rip-rap along the lower portion of the levee. The rip-rap would prevent erosion during high water. The cost of installing rip-rap is about $85,000. Staff has discussed the rip-rap option with FEMA, who indicated they may consider funding a significant portion of the costs because it would be a permanent solution. However, the timing of their decision regarding funding is unclear.

Given the uncertainty of FEMA funding for the rip-rap, the need to remove the debris and repair the erosion under either option, and the short timeline for getting vegetation established this fall, a third option is to move forward with the seeding option but also pursue funding for the rip-rap from FEMA.

**COUNCIL ACTION REQUESTED:**
**Motion regarding approving the levee erosion repair and selecting an erosion control option.**

**City of Afton**
**3033 St. Croix Trl, P.O. Box 219**
**Afton, MN 55001**

# Meeting Date August 20, 2019

# Council Action Memo

To: Mayor Palmquist and City Council Members

From: Ron Moorse, City Administrator

Date: August 15, 2019

Re: Additional Signage and Trail at Steamboat Park

---

Periodically, people build fires and/or build makeshift shelters in Steamboat Park. To prevent this, Mayor Palmquist has suggested two actions. The first is installing signage at various locations in the park indicating no camping and no fires. The second is to install an additional trail to loop through the park and connect with the existing trail. This will make the park less secluded and will make it easier for the deputies to access the park. The cost of the signs is $100 each. If the Council is open to considering an additional trail, staff can obtain a price quote for installing a trail similar to the existing trail.

**COUNCIL ACTION REQUESTED:**

**Motion regarding the installation of signage in Steamboat Park indicating no camping and no fires and regarding the installation of a second trail in the park.**

City of Afton
3033 St. Croix Trl, P.O. Box 219
Afton, MN 55001

# Meeting Date August 20, 2019

# Council Action Memo

To: Mayor Palmquist and City Council Members

From: Ron Moorse, City Administrator

Date: August 15, 2019

Re: Laserfiche Workflows Implementation and Credit Card Payment Capability

---

Workflows Implementation

Staff and Council member Ross have been working with Cities Digital regarding creating workflows to both track and increase productivity related to recurring activities. Staff decided to start with a simpler workflow, so selected complaint tracking. This process has similarities to other possible workflows, such as the building inspection process and the zoning application review process, in terms of tracking the steps of a process, placing timelines on the process and tracking the results of actions taken.

The Laserfiche software the City purchased includes the workflow creation software. Cities Digital assisted with the initial steps of developing the complaint tracking workflow. The next steps require the use of the workflow software to generate a flowchart and link activities to related forms, such as form letters. Staff needs training in the use of the workflow software to be able to develop workflows. Cities Digital will provide a consultant to work through the workflow development process with staff to complete the complaint tracking workflow. It is estimated this process will take about ten hours. The City has 31 hours remaining of the training time that was part of the initial purchase of Laserfiche, so the consultant assistance will be at no cost.

Credit Card Payments

Laserfiche has the ability to enable a person at the counter to fill out a permit application and pay the permit fee electronically. This has the benefits of creating an electronic permit application document that can be searched by Laserfiche and providing an electronic payment option. The City has a Chromebook laptop that could be used for this purpose. The cost to implement this would be a one-time cost of $350 for a device license from Laserfiche and a $70 per year maintenance fee.

**COUNCIL ACTION REQUESTED:**

**Motion regarding obtaining a device license from Laserfiche for a one-time cost of $350 and an annual maintenance cost of $70 to enable credit card payments.**

**City of Afton**
**3033 St. Croix Trl, P.O. Box 219**
**Afton, MN 55001**

# Meeting Date August 20, 2019

# Council Action Memo

To: Mayor Palmquist and City Council Members

From: Ron Moorse, City Administrator

Date: August 15, 2019

Re: City Council Expense Reimbursement Policy

---

At its July 16 regular meeting, the Council directed staff to draft a policy regarding the reimbursement of Council members for expenses related to their City Council activities. The Council directed that the policy narrowly define the types of expenses eligible for reimbursement. The two types of reimbursements identified were expenses related to a Council member's attendance at training conferences and seminars for which the Council has approved a Council member's attendance, and mileage reimbursement for attendance at meetings of organizations to which the Council has appointed a Council member to serve as a liaison. The Expense Reimbursement Policy is attached for the Council's consideration.

**COUNCIL ACTION REQUESTED:**
**Motion regarding the City Council Expense Reimbursement Policy.**

Adoption Date:
August 20, 2019

**City Council Expense Reimbursement Policy**

Purpose: This policy is to set out the types of expenses that are reimbursable to City Council members.

Reimbursable Expenses:

1. Mileage reimbursement and lodging expenses, and meal expenses when not included in the registration fee, when attending training conferences and seminars for which the Council has approved a Council member's attendance.
2. Mileage reimbursement for attendance at meetings of organizations to which the Council has appointed a Council member to serve as liaison.

**City of Afton**
**3033 St. Croix Trl, P.O. Box 219**
**Afton, MN 55001**

# Meeting Date August 20, 2019

# Council Action Memo

To: Mayor Palmquist and City Council Members

From: Ron Moorse, City Administrator

Date: August 14, 2019

Re: Police Service Staffing Level

---

The City of Afton currently shares with the Cities of Lakeland, Lakeland Shores, Lake St. Croix Beach and St. Mary's Point the cost of a deputy assigned to patrol in the five cities during the hours of 6:30 a.m. to 1:30 p.m. This is in addition to the South general car, which is responsible for patrolling Denmark Township and the five cities. During the hours of 11:30 p.m. to 6:30 a.m., the five cities are covered by the South general car. Mayor Palmquist requested that the police service staffing level in the overnight hours be placed on the Council meeting agenda to determine whether the Council wants to examine the police staffing level in more depth during the 2020 budget process. If a deputy was added to patrol the five cities during the overnight hours, the cost to Afton would be $62,700 per year. If the other cities were not interested in an additional patrol officer, the cost to Afton would be $139,400.

**COUNCIL ACTION REQUESTED:**
**Motion regarding examining the police service staffing level in more depth.**